Belle II KLM

K_L and Muon Detection

Leo Piilonen, Virginia Tech

Belle II Summer School at PNNL August 2016

The KLM ("K_L–Muon detector")

consists of large-area thin planar detectors interleaved with the iron plates of the 1.5T solenoid's flux return yoke.

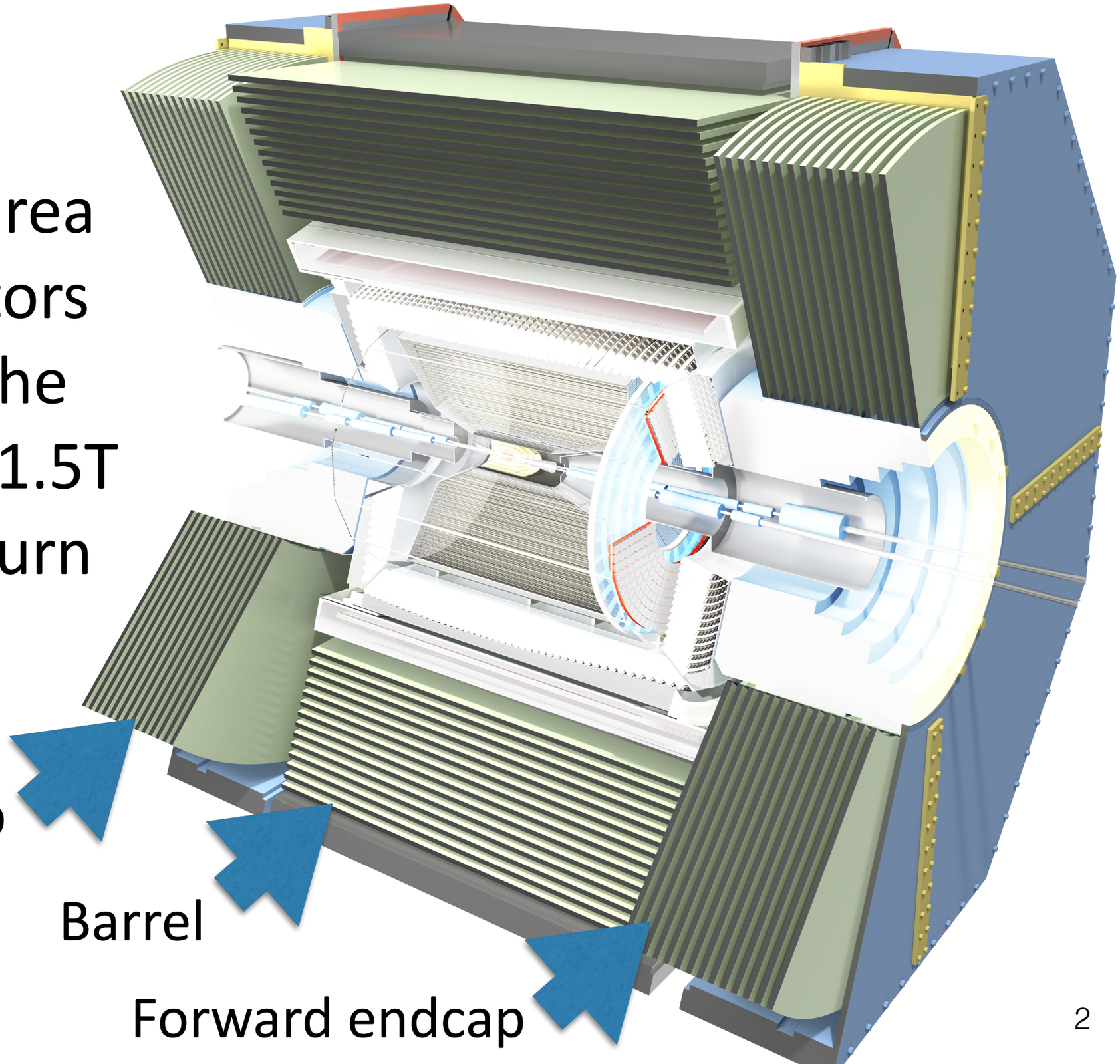

Performance Requirements (1)

- Detect K_L mesons and muons (≈1 per event)

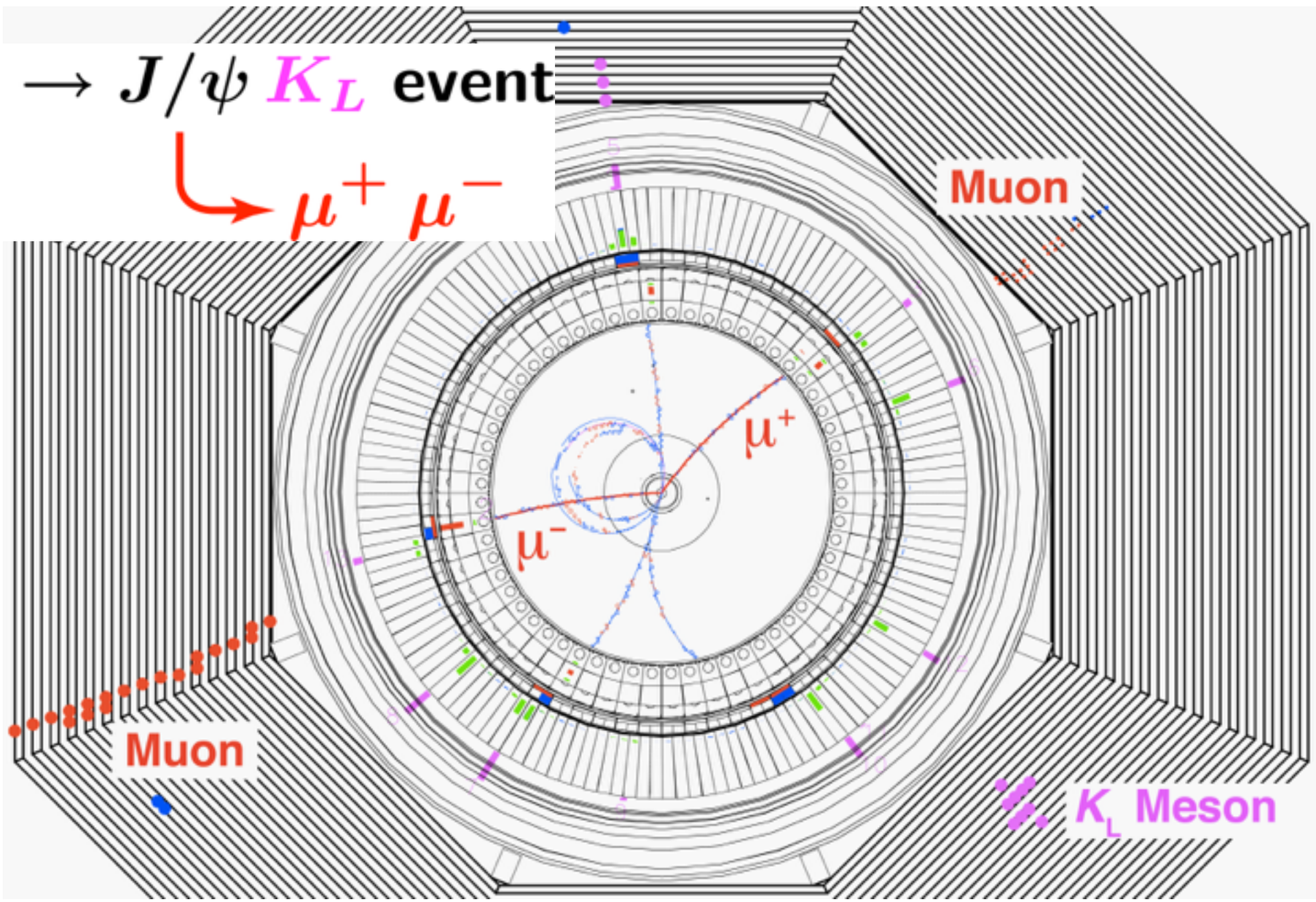

Questions, questions, questions …

1. How does the KLM differ from the outer-detector designs in CDF, DØ, ATLAS, CMS? *(slides #2, 3)*
2. How does the KLM differ from the outer-detector designs in BaBar, BES III, CLEO? *(slides #2, 3)*
3. How many hadronic interaction lengths and radiation lengths are there between the interaction point and the KLM? *(mostly in the ECL)*
4. How many hadronic interaction lengths and radiation lengths are there in the KLM? *(mostly in the steel plates of the yoke)*
5. Do your answers to #3 and #4 depend on the polar angle θ? If so, how?

Performance Requirements (2)

- Detect K_L mesons with high efficiency & purity and with good angular resolution
  - For CP-sensitive B decay modes like $B \to J/\psi\, K_L$
  - For K_L veto in missing-energy modes like $B \to \tau\, \nu$

Efficiency

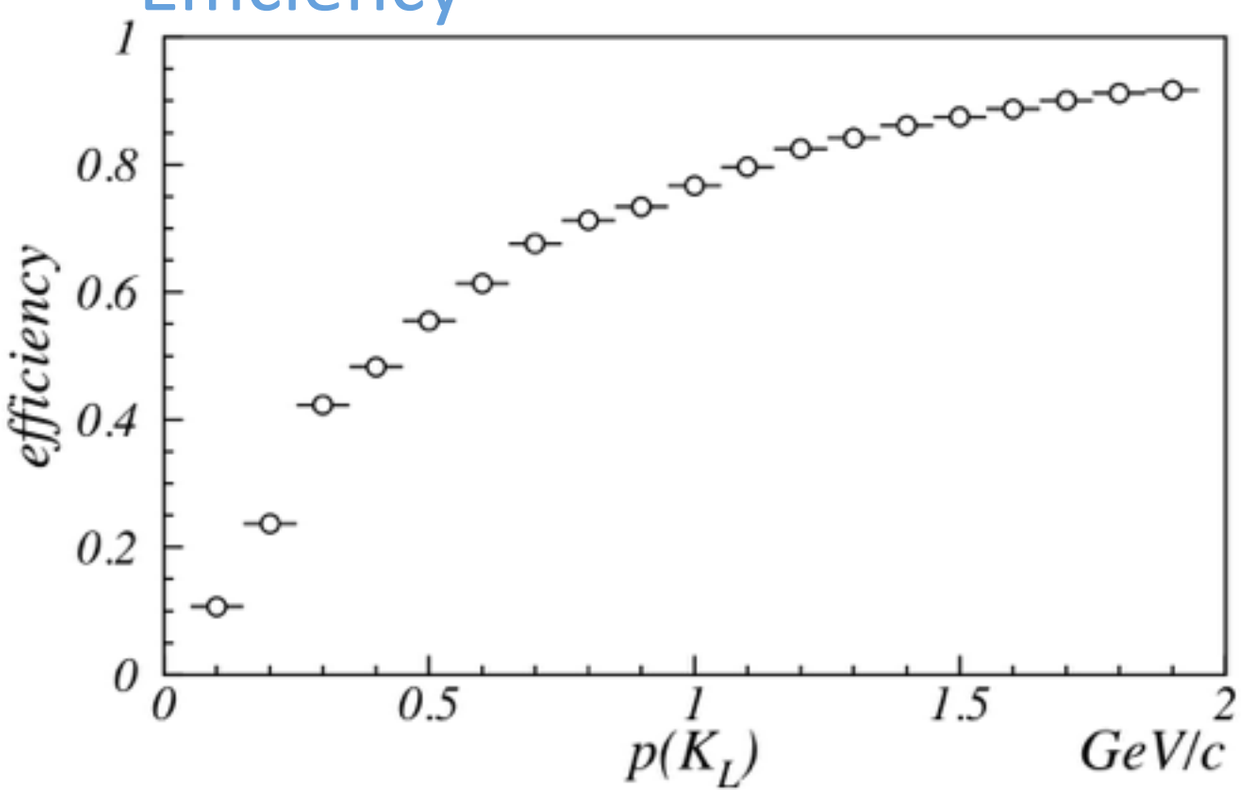

Angular resolution

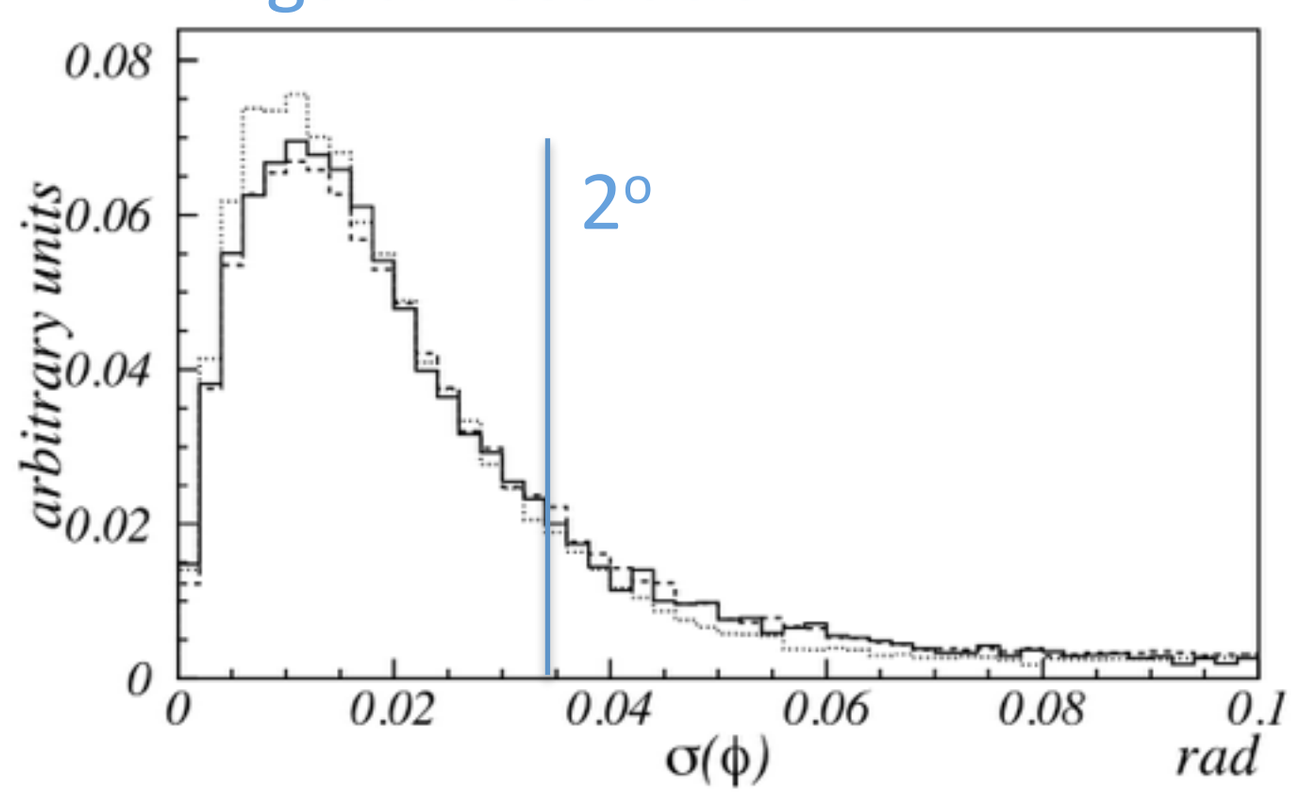

Questions, questions, questions …

6. Why does the K-Long detection efficiency depend on momentum? *(left graph of slide #5)*
7. There no performance requirement for the K-Long energy resolution … how is this energy measured?
8. Why is there a performance requirement for the K-Long angular resolution? *(right graph of slide #5)*

Performance Requirements (3)

- Identify muons with high efficiency & purity for momenta above 0.6 GeV/*c*

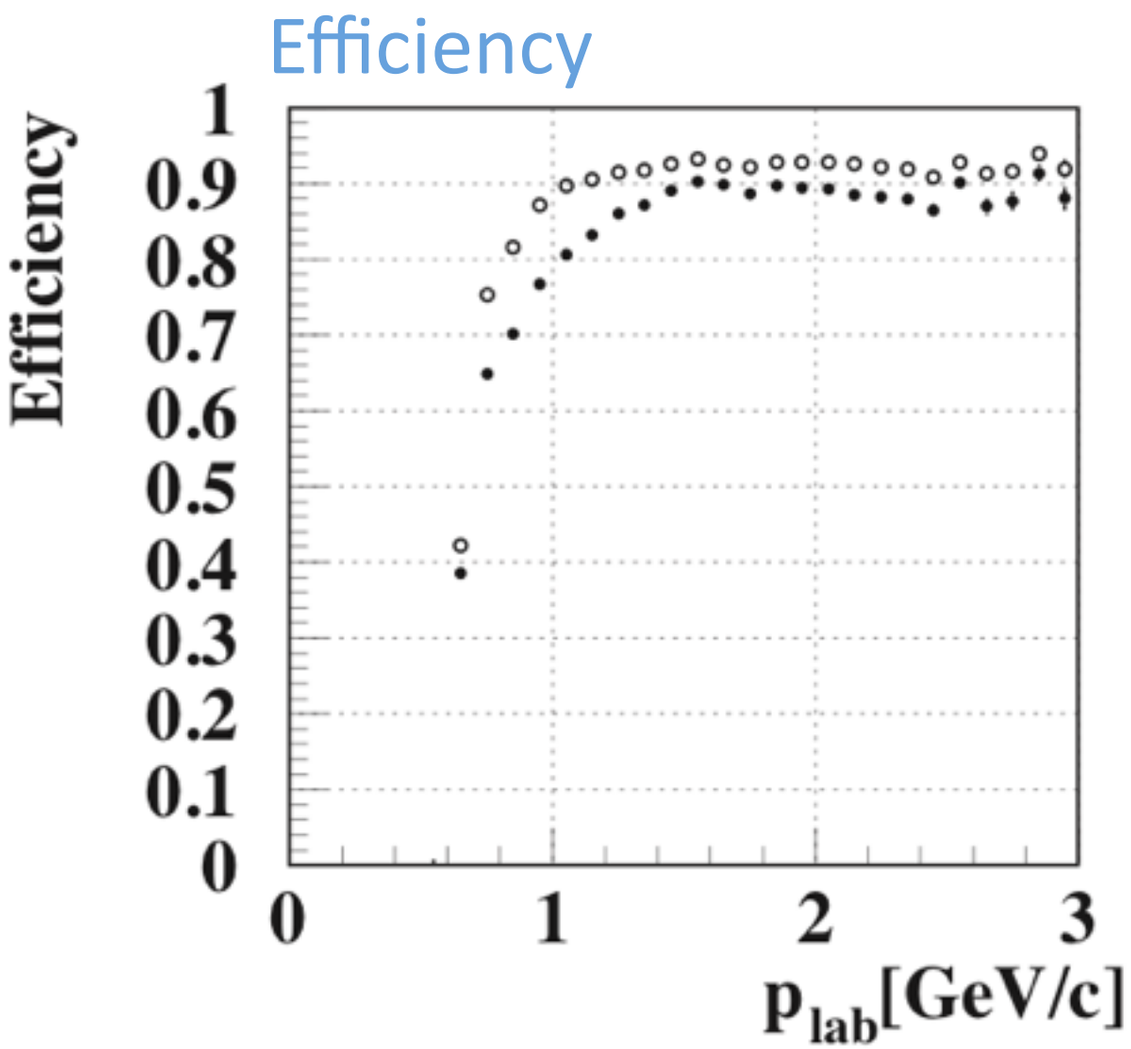

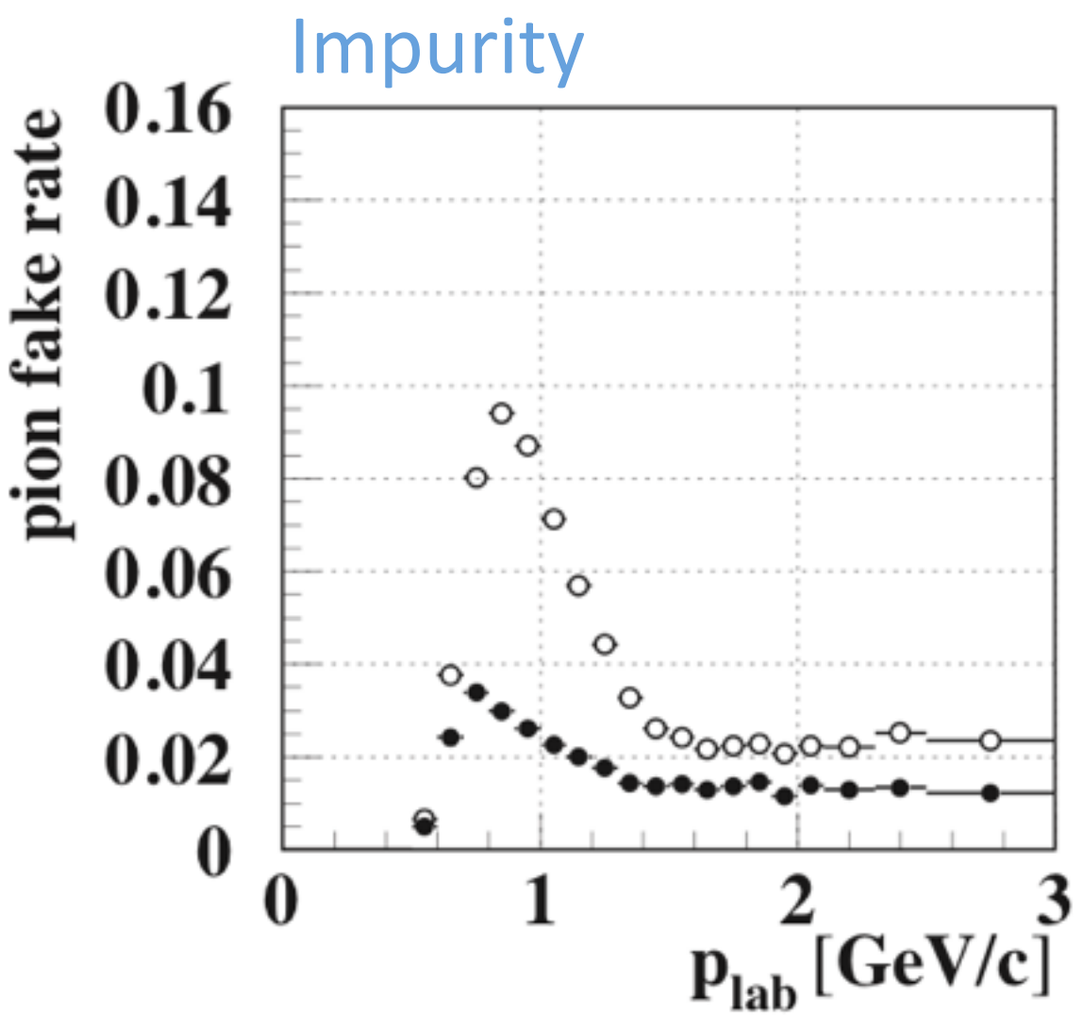

Questions, questions, questions …

9. Why does the muon-detection efficiency drop to zero below ~0.6 GeV/*c*? Why isn't the peak efficiency 100%? *(left graph of slide #7)*

10. Why does the hadron fake rate rise at low momentum (and above ~0.6 GeV/*c*)? Why isn't the base fake rate 0%? *(right graph of slide #7)*

In the barrel KLM …

- Continue to use the Belle-era glass-electrode RPCs in the outer 13 layers
- Install scintillators in the 2 innermost barrel layers

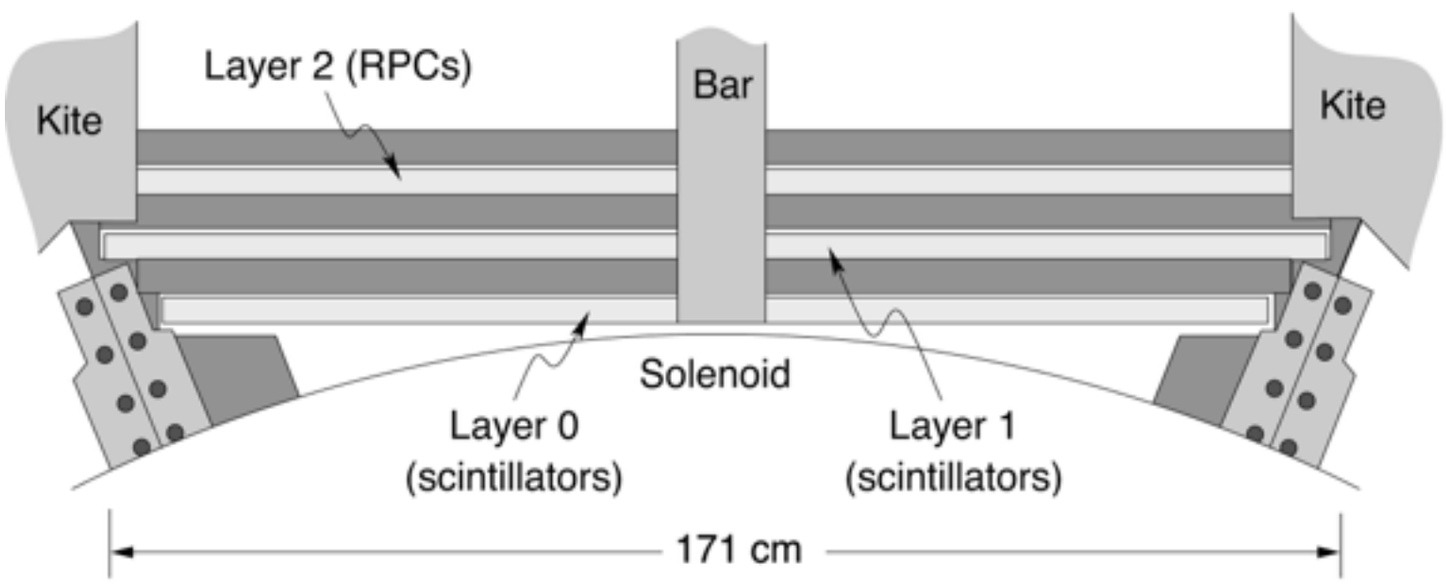

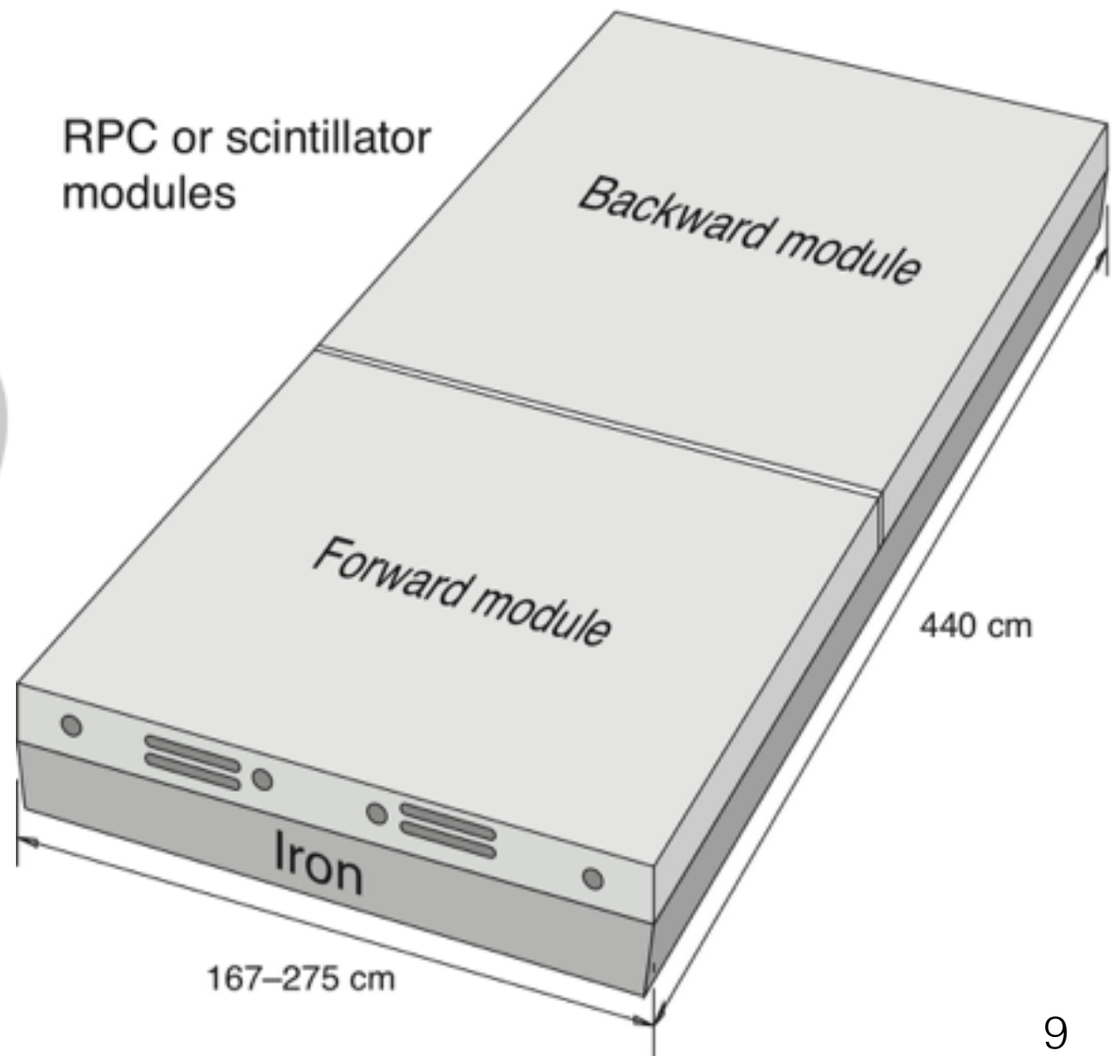

Belle Resistive Plate Counter contains ...

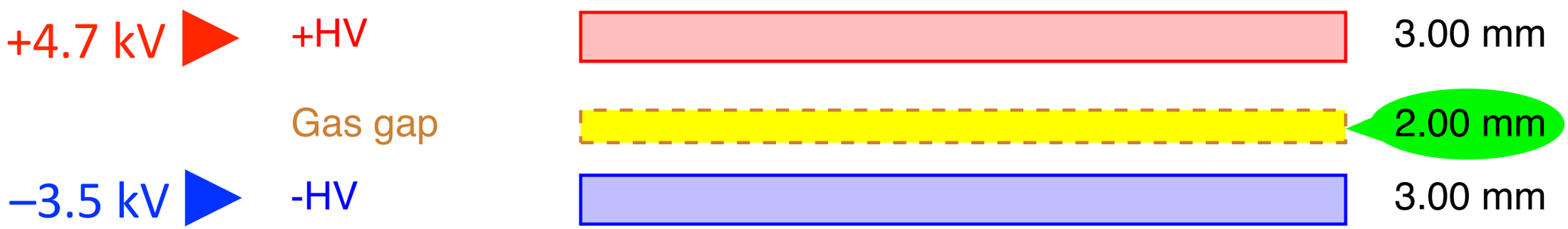

Float-glass electrodes

$$\rho \simeq 10^{12}\,\Omega \cdot \mathrm{cm}$$

Non-flammable gas:

62% HFC-134a

30% argon

8% butane-silver

Superlayer has two independent RPCs

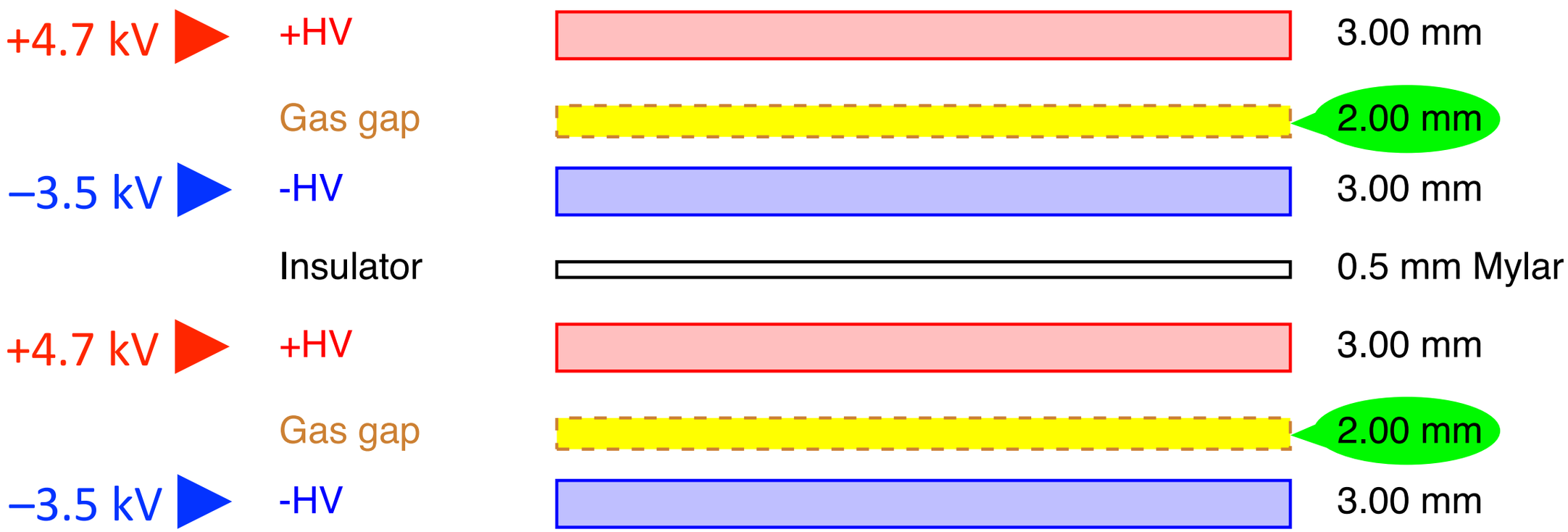

… and orthogonal readout planes.

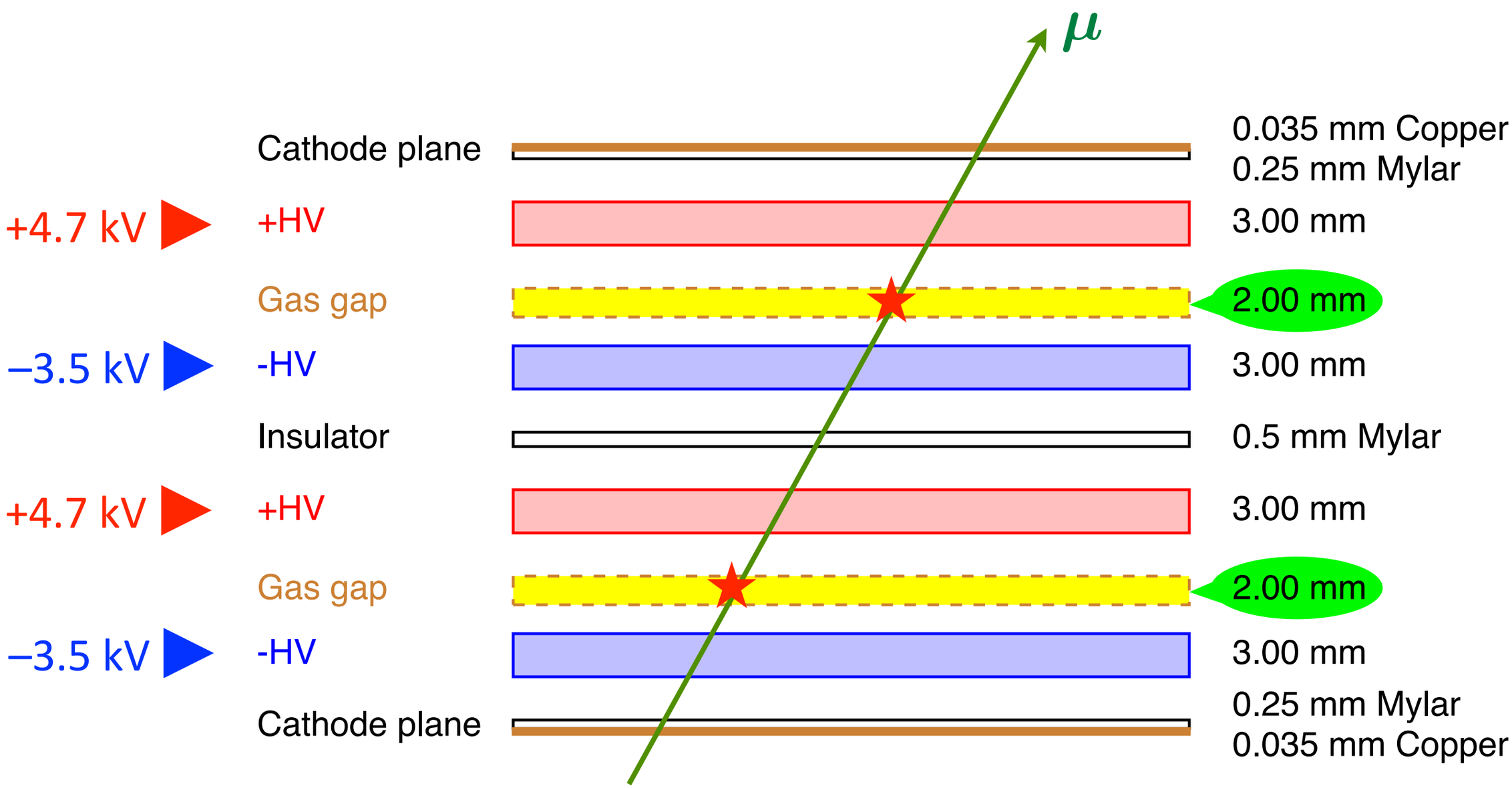

A discharge (=streamer) in *either* gas gap induces an image charge on *both* readout planes.

Belle Resistive Plate Counter

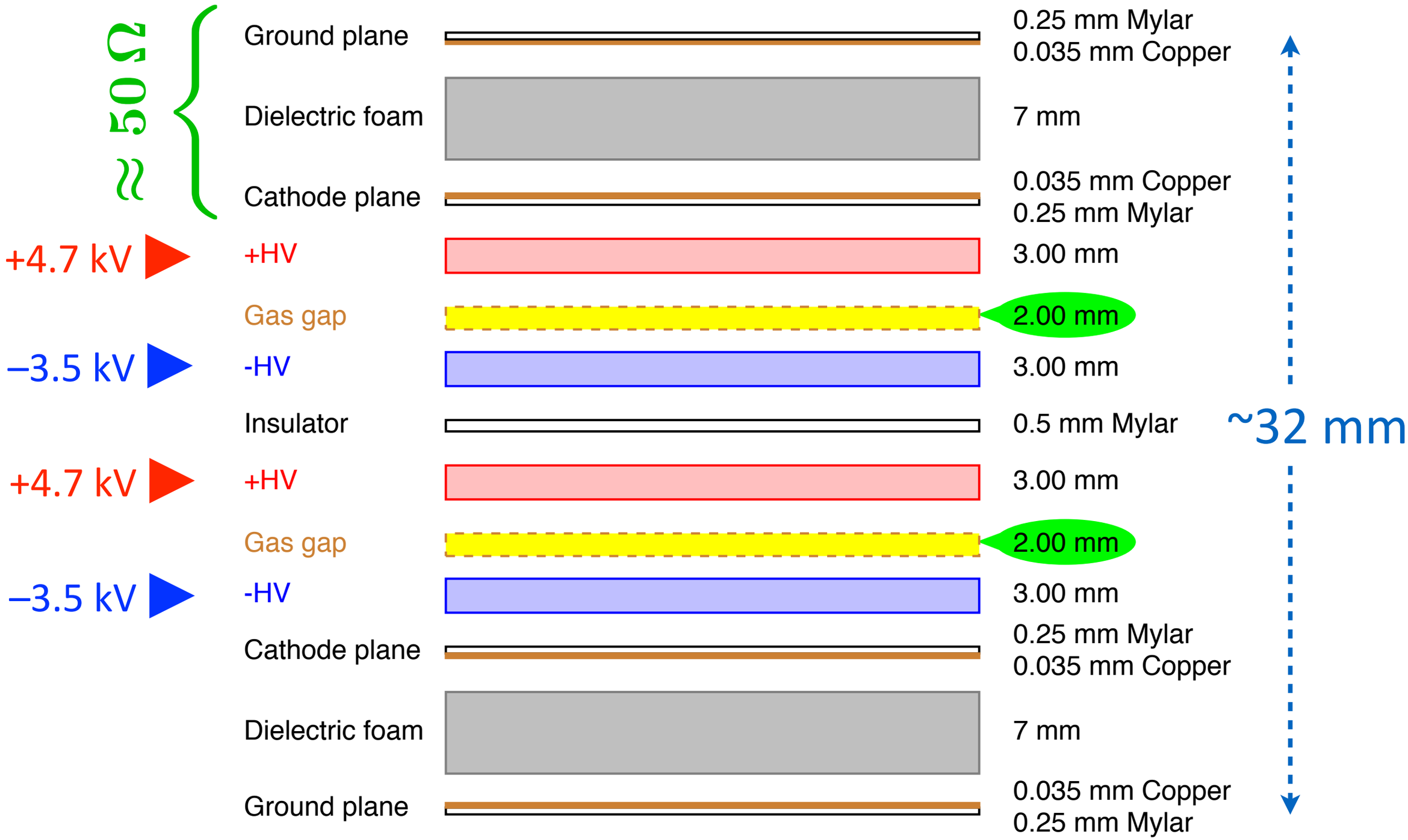

Questions, questions, questions …

11. Two alternative ways to operate an RPC are "streamer mode" and "proportional mode." Explain the difference. We chose streamer mode – give a few cost/benefit reasons why we did so.

12. If you decided to operate our RPCs in proportional mode, what would you need to change to accomplish this?

13. The ±HV to the top RPC is independent of the ±HV to the bottom RPC. Why? *(on slide #13)*

14. The cathode strip width *(not shown in the slides)* is about 4 cm. Why not half (2 cm) or double (8 cm) this value?

Gas supply to the barrel KLM

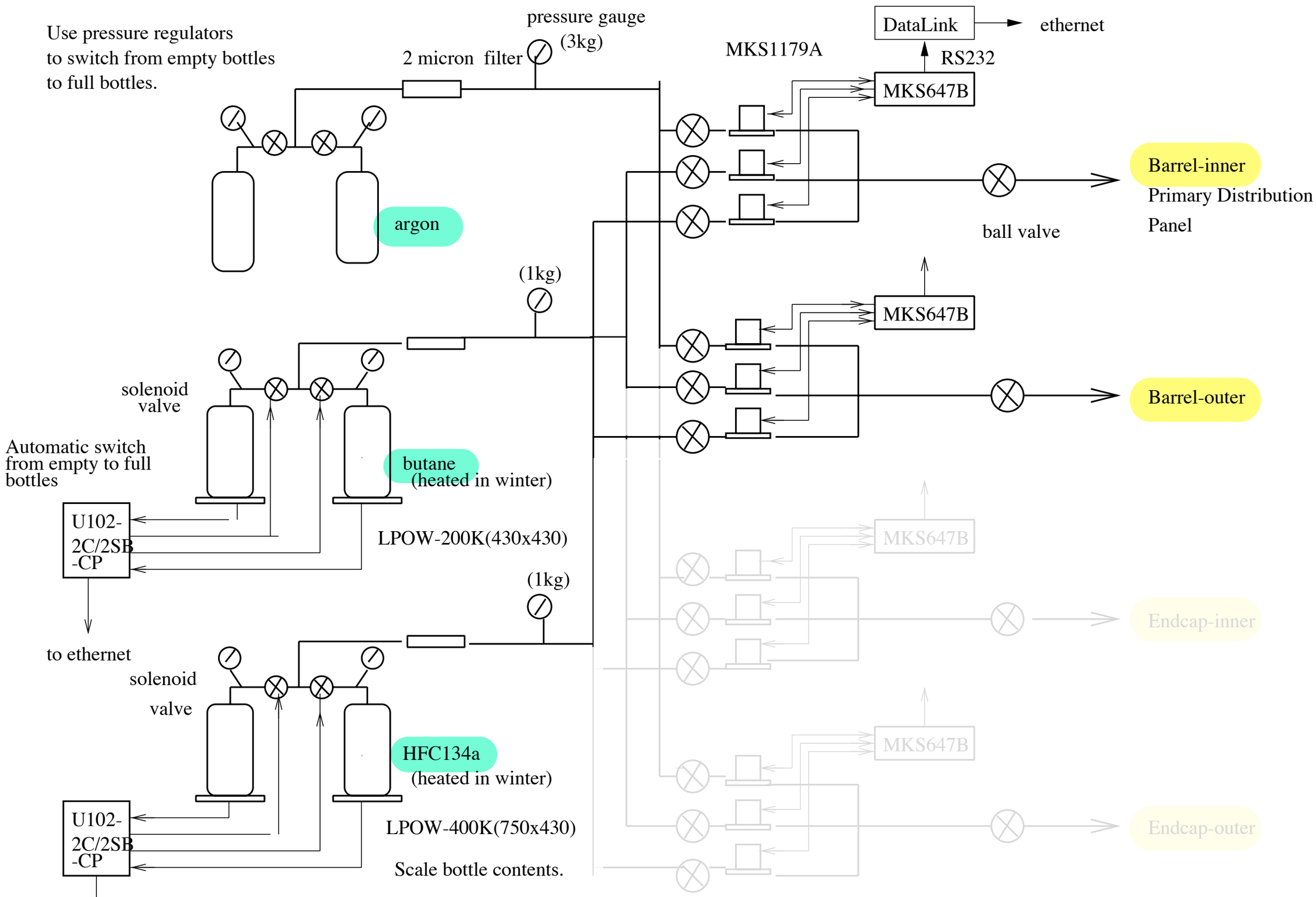

Questions, questions, questions …

15. Where in the gas-supply system is human intervention required? *(on slide #15)*

Gas is distributed to the barrel RPCs

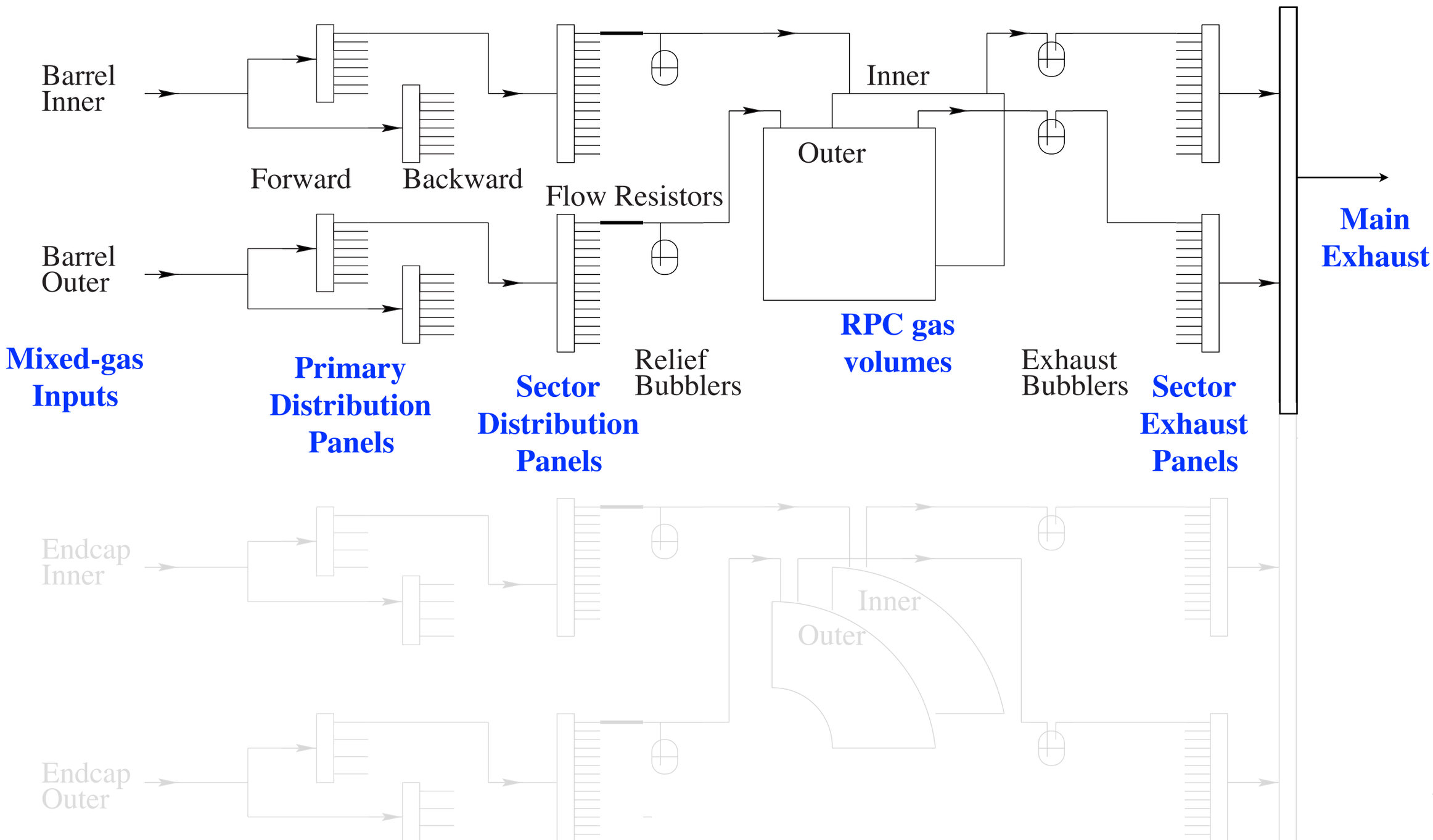

Questions, questions, questions …

16. What is a “flow resistor”? *(on slide #17)*
17. How does the flow resistor regulate the gas flow rate to each RPC?
18. Why isn’t the gas flow daisy-chained from the inner to the outer RPC in a given detector module?

Gas is exhausted to the surface via a Venturi pump

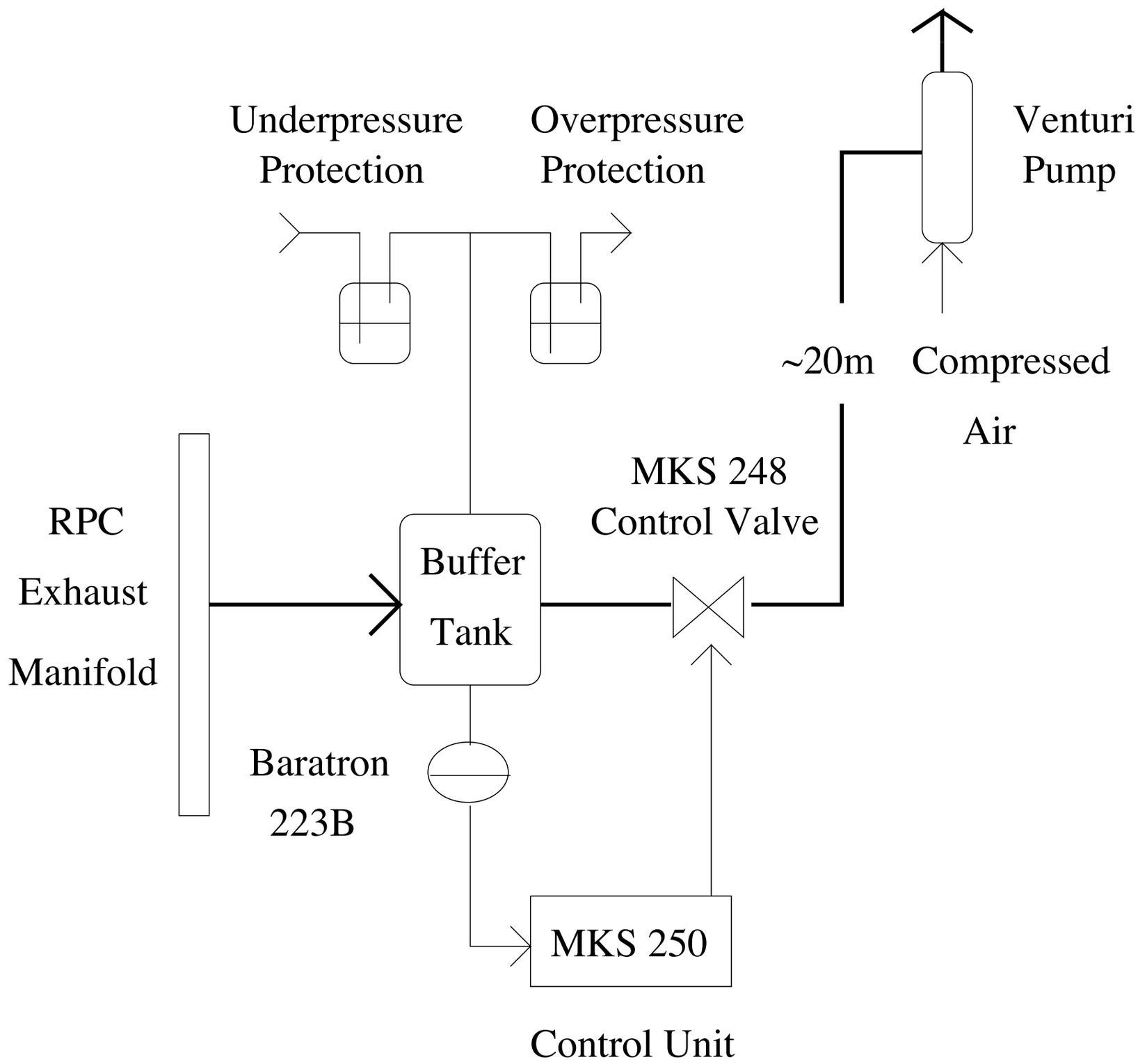

Questions, questions, questions …

19. What is a “Venturi pump”? *(on slide #19)*
20. How does the Venturi pump operate?
21. Why is a Venturi pump needed here? Couldn’t you just run the exhaust hose to the outside?

RPC cathode strip delivers ~200 mV signal

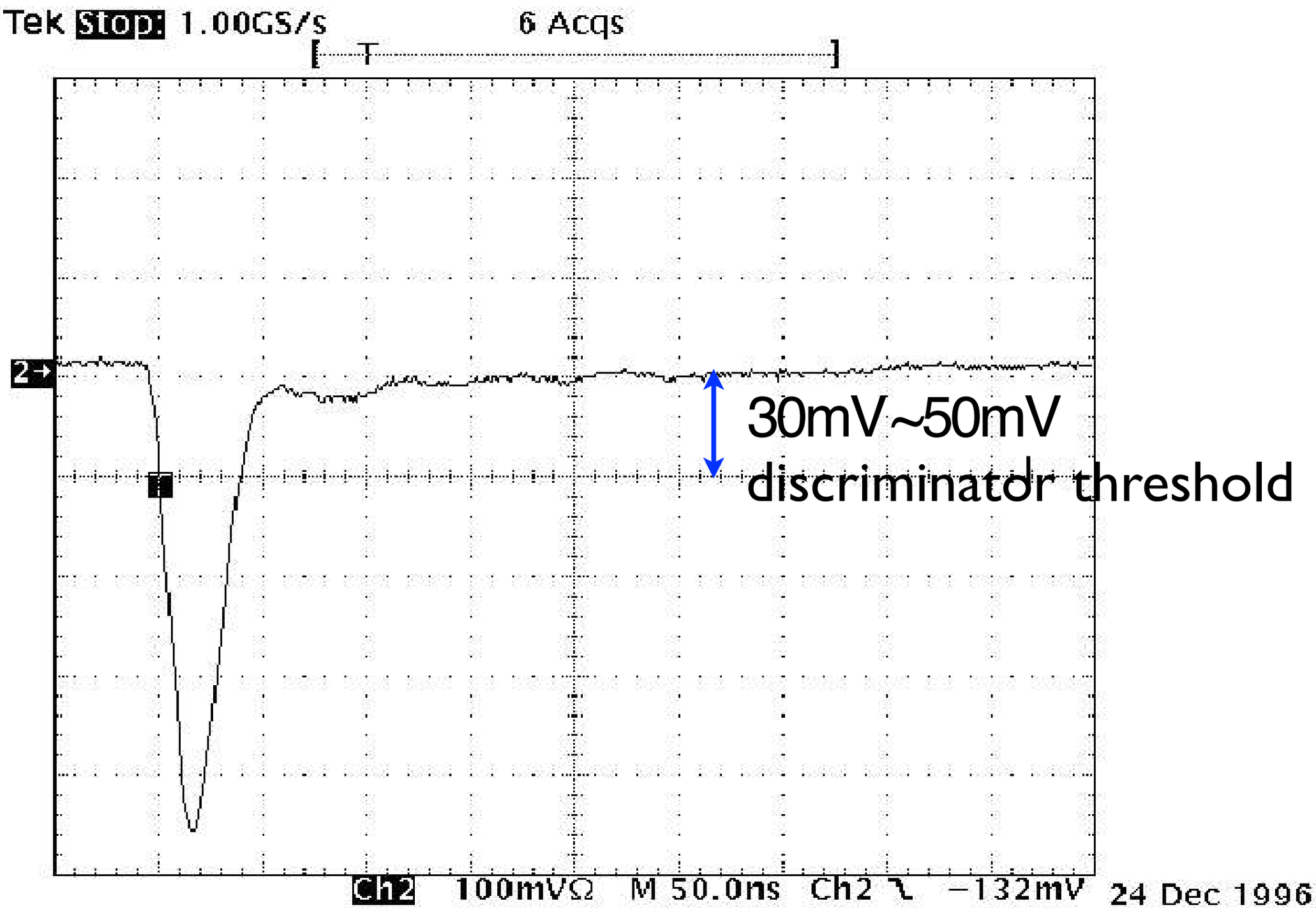

Uncalibrated time resolution is ~200 ns

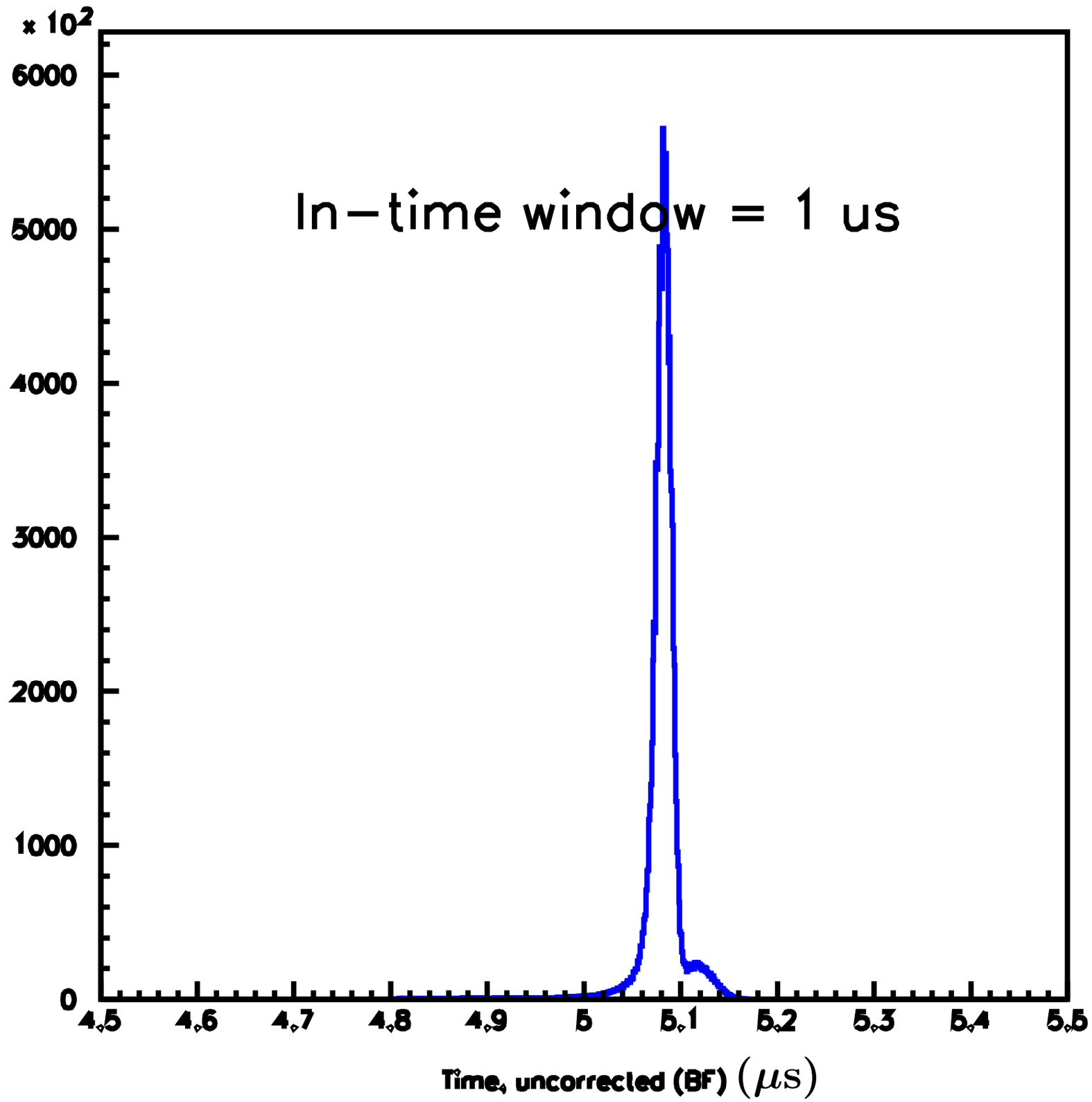

Calibrated time resolution is ~10 ns

(Belle didn't use this!)

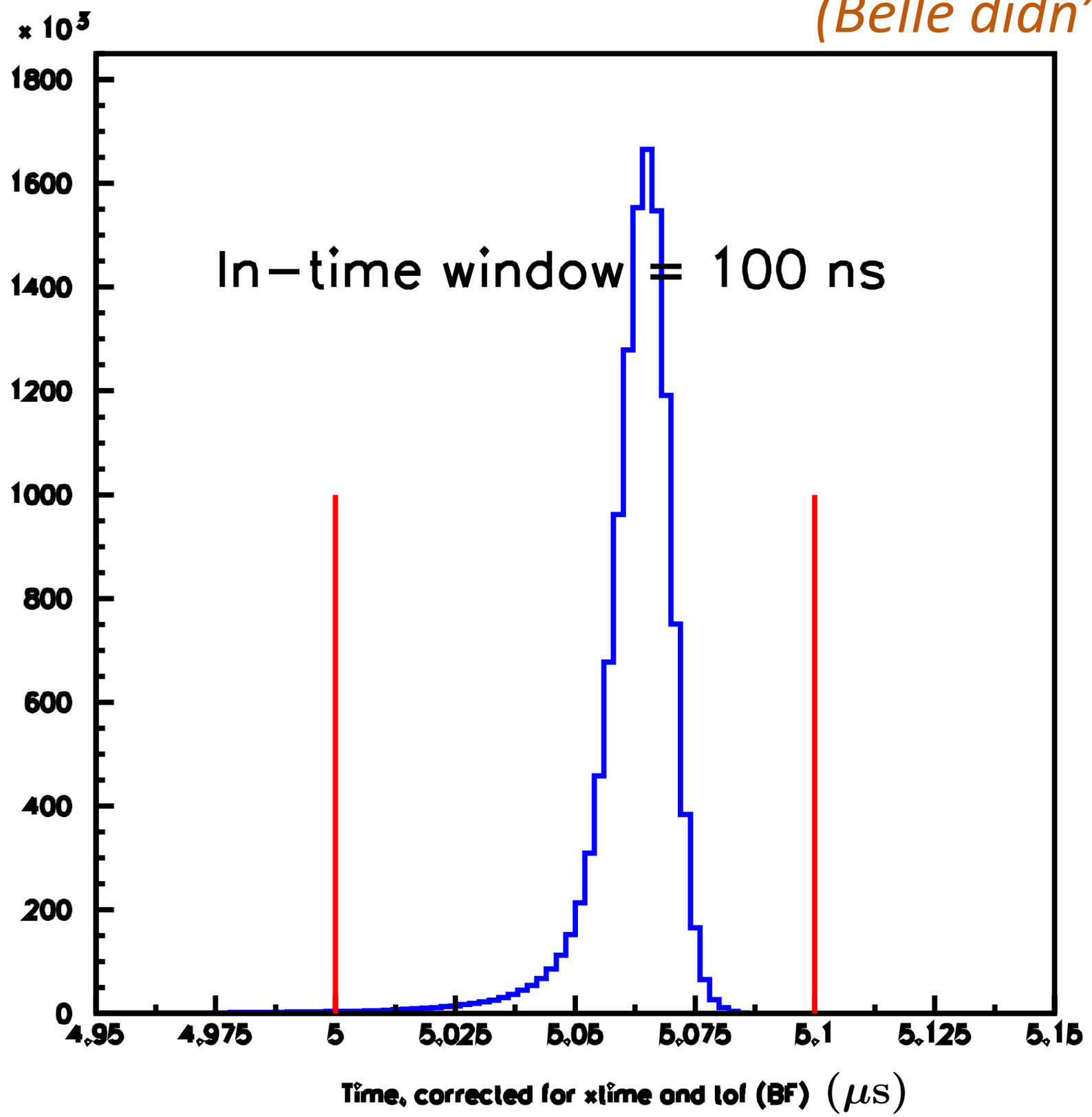

RPCs work well at low background rates …

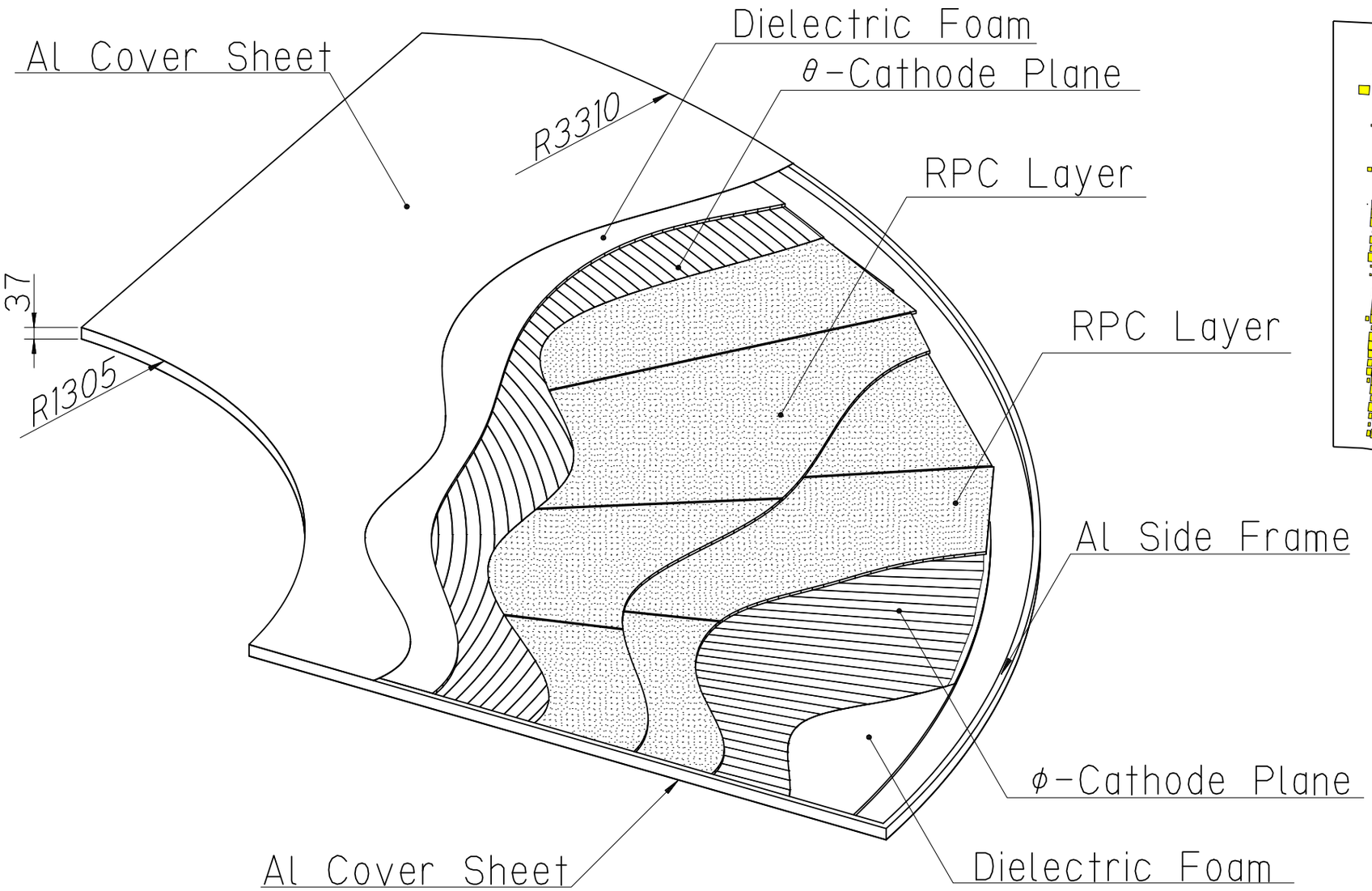

Cutaway view of an endcap superlayer

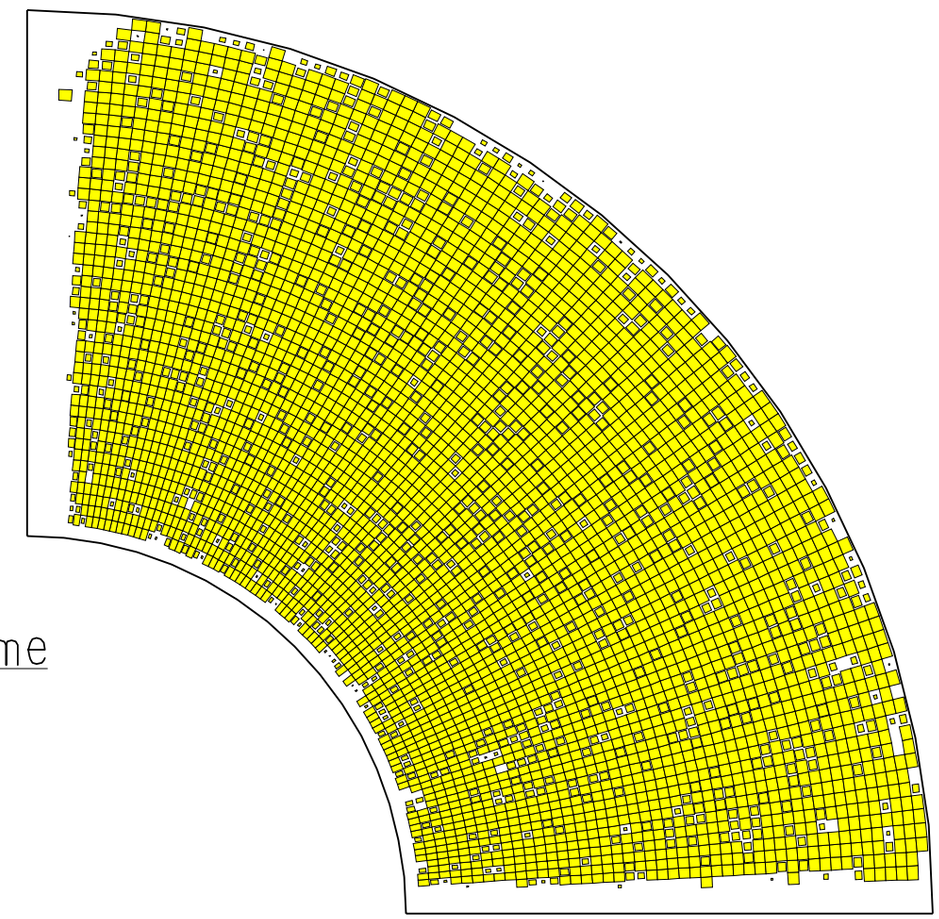

Muon detection efficiency for one endcap superlayer

… but projected ambient neutron rate in Belle II means that endcap RPCs would never see muons

Efficiency in Belle

Layer	Barrel	Forward Endcap	Backward Endcap
0	0.97	0.91	0.9
1	0.98	0.93	0.9
2	0.99	0.94	0.9
3	0.99	0.94	0.9
4	0.99	0.94	0.89
5	0.99	0.92	0.88
6	0.99	0.93	0.89
7	0.99	0.92	0.87
8	0.99	0.92	0.86
9	0.99	0.9	0.85
10	0.99	0.87	0.82
11	0.99	0.82	0.8
12	0.99	0.78	0.81
13	0.99	0.77	0.76
14	0.99	—	—

Efficiency in Belle II

Layer	Barrel	Forward Endcap	Backward Endcap
0	0.13	0	0
1	0.39	0	0
2	0.62	0	0
3	0.78	0	0
4	0.86	0	0
5	0.91	0	0
6	0.94	0	0
7	0.97	0	0
8	0.98	0	0
9	0.99	0	0
10	0.99	0	0
11	0.99	0	0
12	0.99	0	0
13	0.99	0	0
14	0.99	—	—

Questions, questions, questions …

22. Why does the muon-detection efficiency depend on the ambient neutron rate? *(left table on slide #25)*

23. Why does the muon-detection efficiency of the endcap RPCs fall in the outer layers, i.e., farther from the interaction point? *(left table on slide #25)*

24. Why does the muon-detection efficiency of the barrel RPCs fall in the inner layers, i.e., closer to the interaction point? *(both tables on slide #25)*

25. How would you avoid the loss of efficiency at the high neutron rate? *(right table on slide #25)*

… whereas scintillators in innermost 2 barrel layers mitigate neutron-induced efficiency loss

BKLM Layer	Neutron-induced RPC Rate (Hz/cm^2)	Resulting RPC Efficiency
0	**14.2**	**0.13**
1	**10.2**	**0.39**
2	6.4	0.62
3	3.6	0.78
4	2.2	0.86
5	1.3	0.91
6	0.8	0.94

all RPCs

BKLM Layer	Neutron-induced RPC Rate (Hz/cm^2)	Resulting RPC Efficiency
0	–	–
1	–	–
2	1.9	0.9
3	1	0.94
4	0.6	0.96
5	0.2	0.98
6	0.2	0.98

scintillators and polystyrene filler

RPCs

n flux ÷ 3.5

⇒ recovered ε

High-resistivity glass electrodes in RPCs cause drop in efficiency with increasing ambient neutron rate

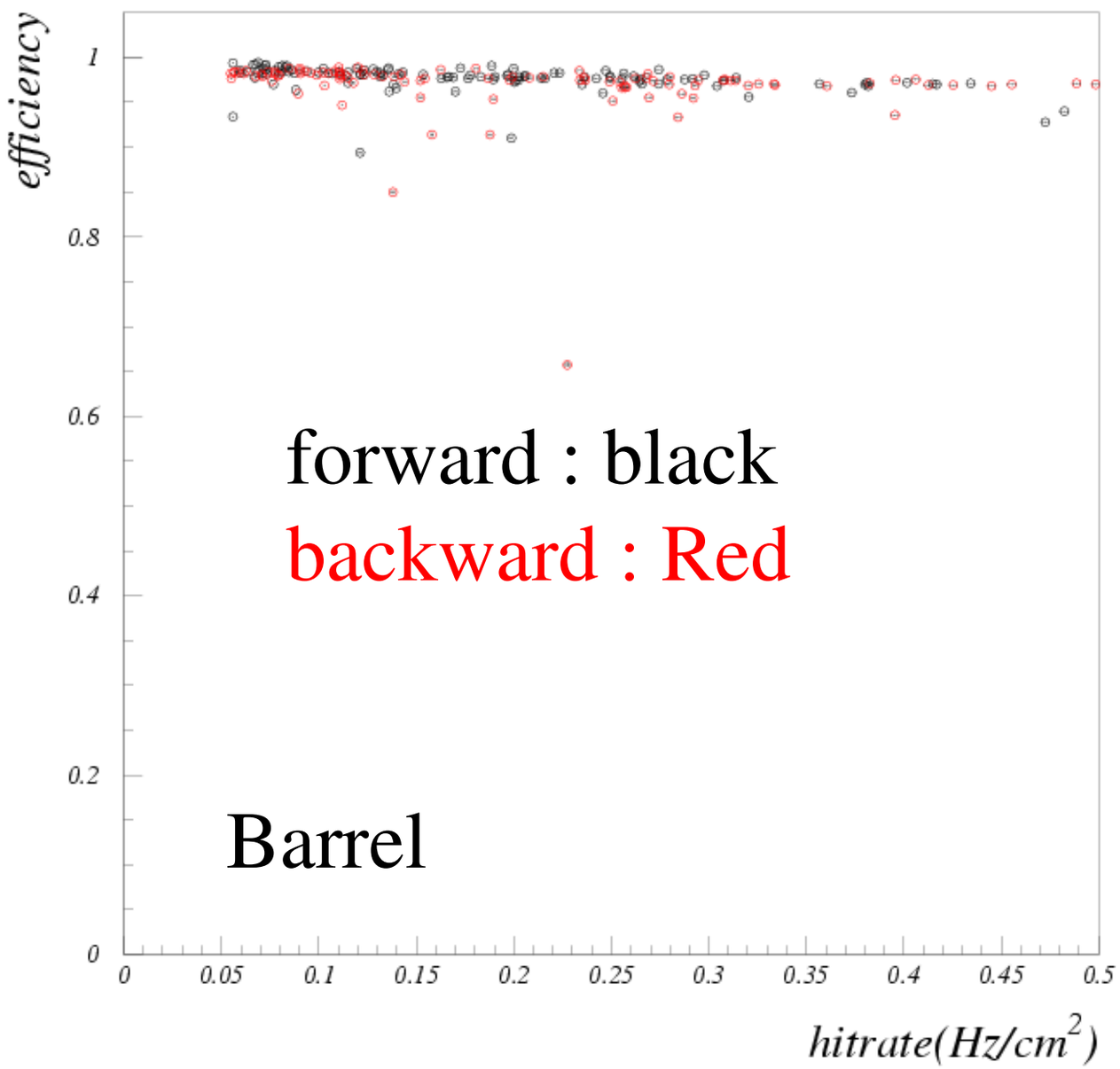

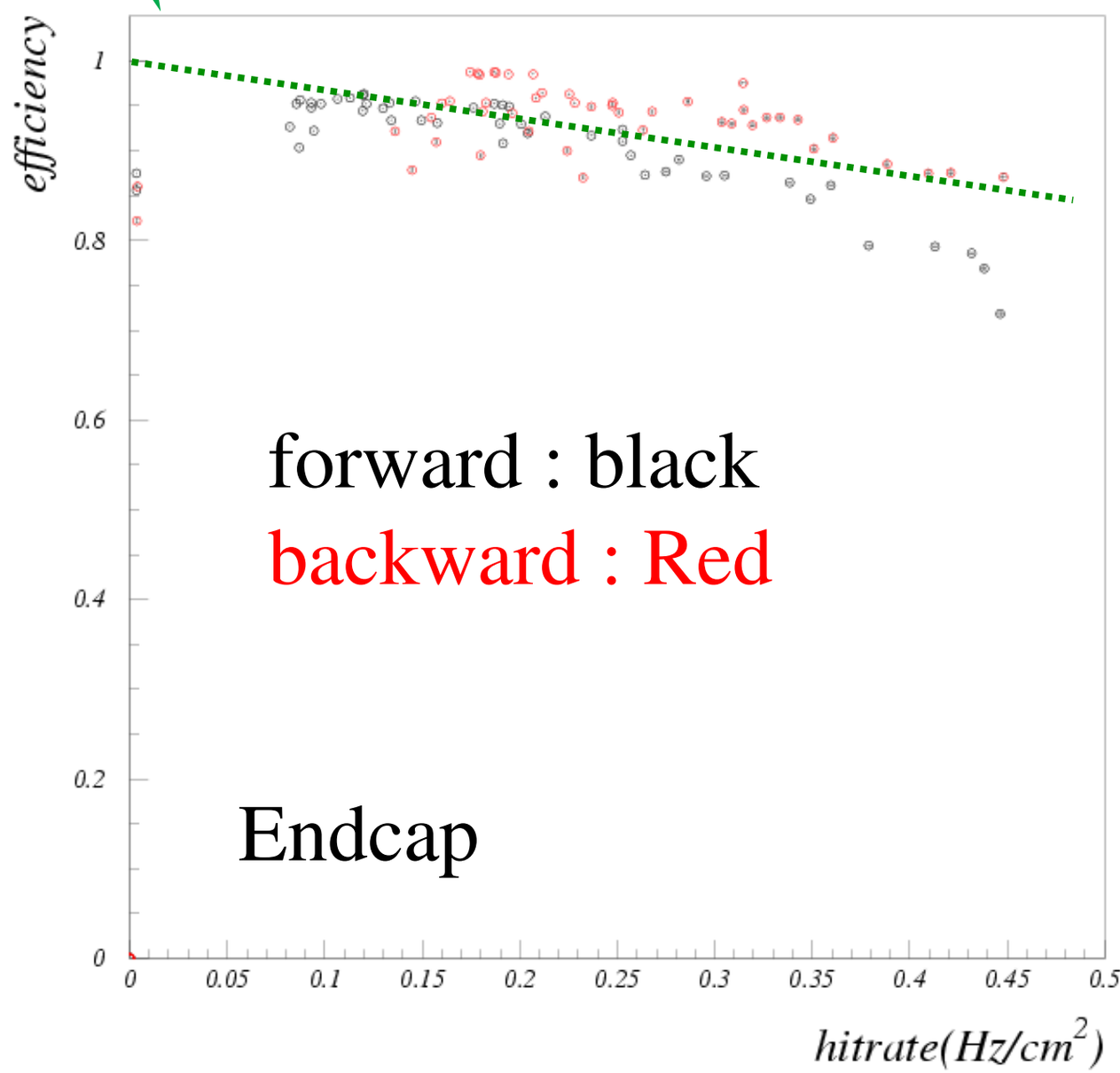

Endcap KLM is bombarded by beam-induced soft neutrons in Belle *... not enough exterior shielding.*

Expect much worse in Belle II.

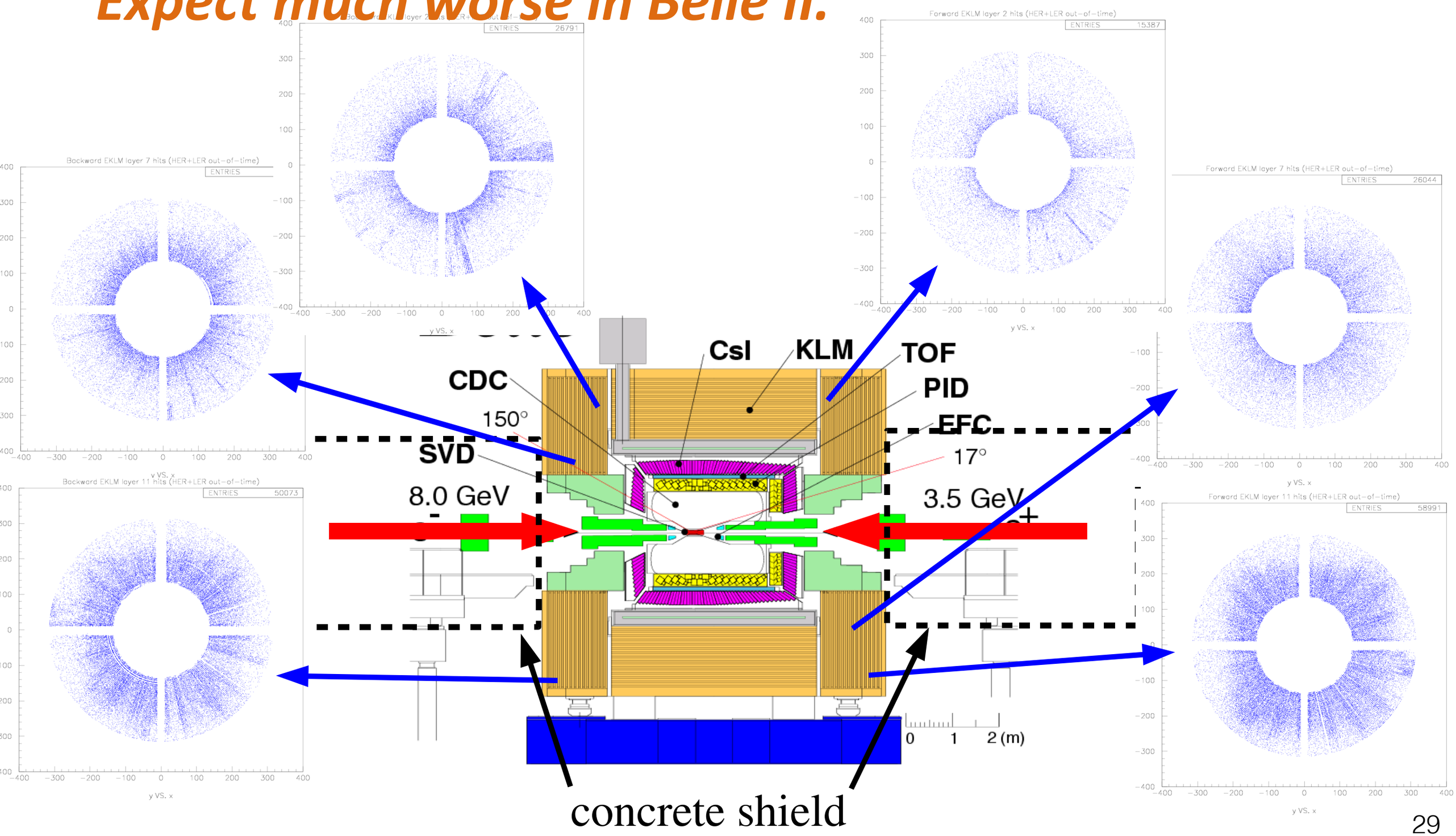

Replace endcap RPCs with scintillators

- reuse existing RPC module frames
- 75 X- and Y-strips in each module
- 16,800 strips total (1400 m^2)
- readout via WLS fibre and attached SiPM sensor at outer radius (mirrored at inner radius)

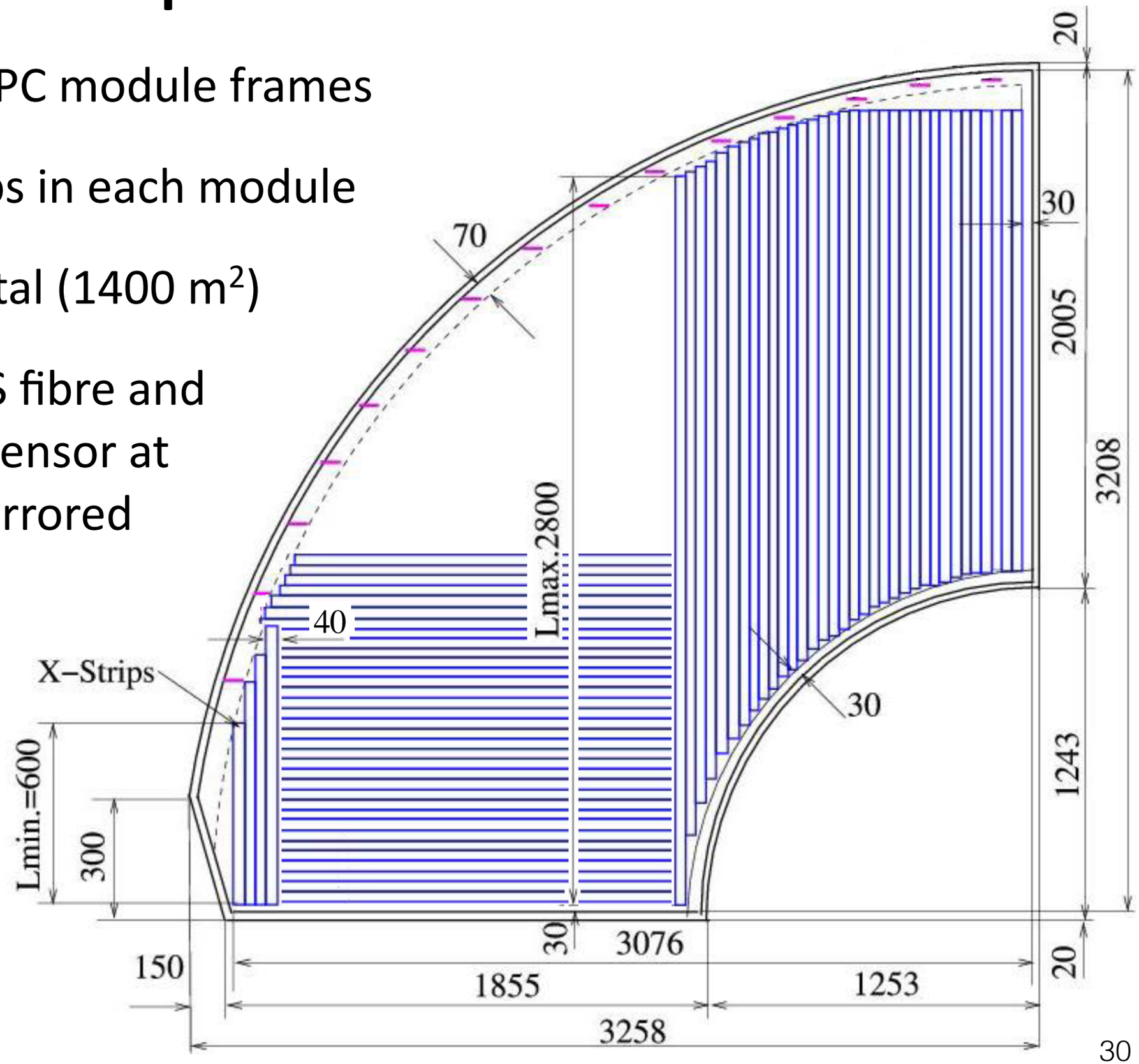

Questions, questions, questions …

26. How do scintillators solve the RPC efficiency-loss problem?
27. What other benefits do scintillators have over RPCs?
28. Why weren't scintillators (or some other technology like wire chambers or limited-streamer tubes) not used in the first place in the Belle era?
29. Why weren't all RPCs replaced with scintillators?

An endcap scintillator superlayer

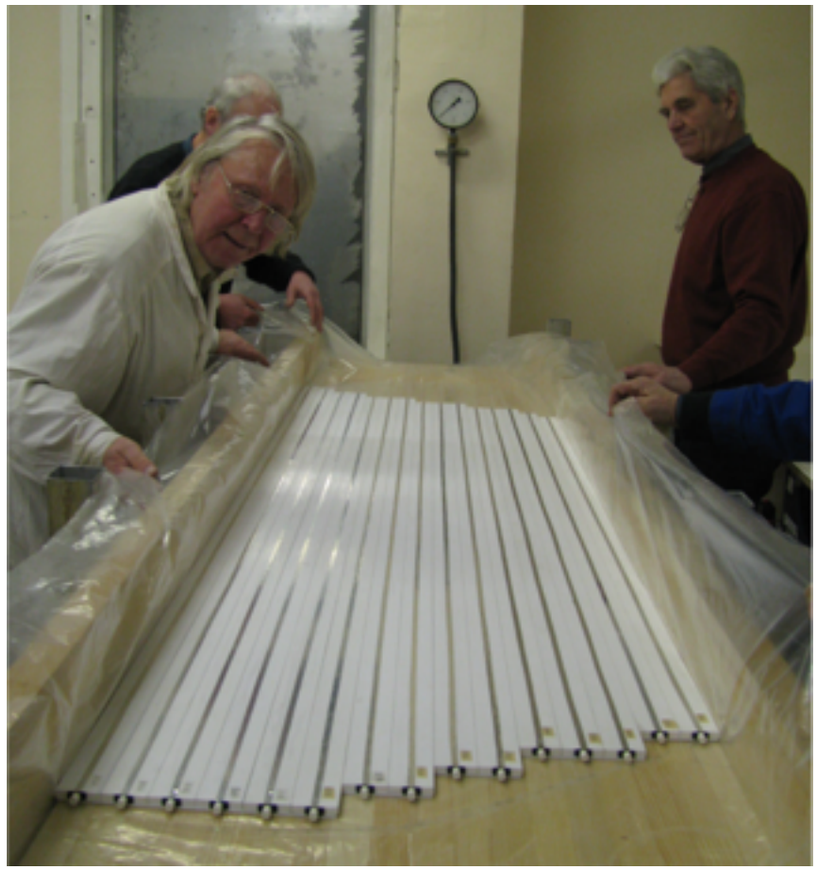

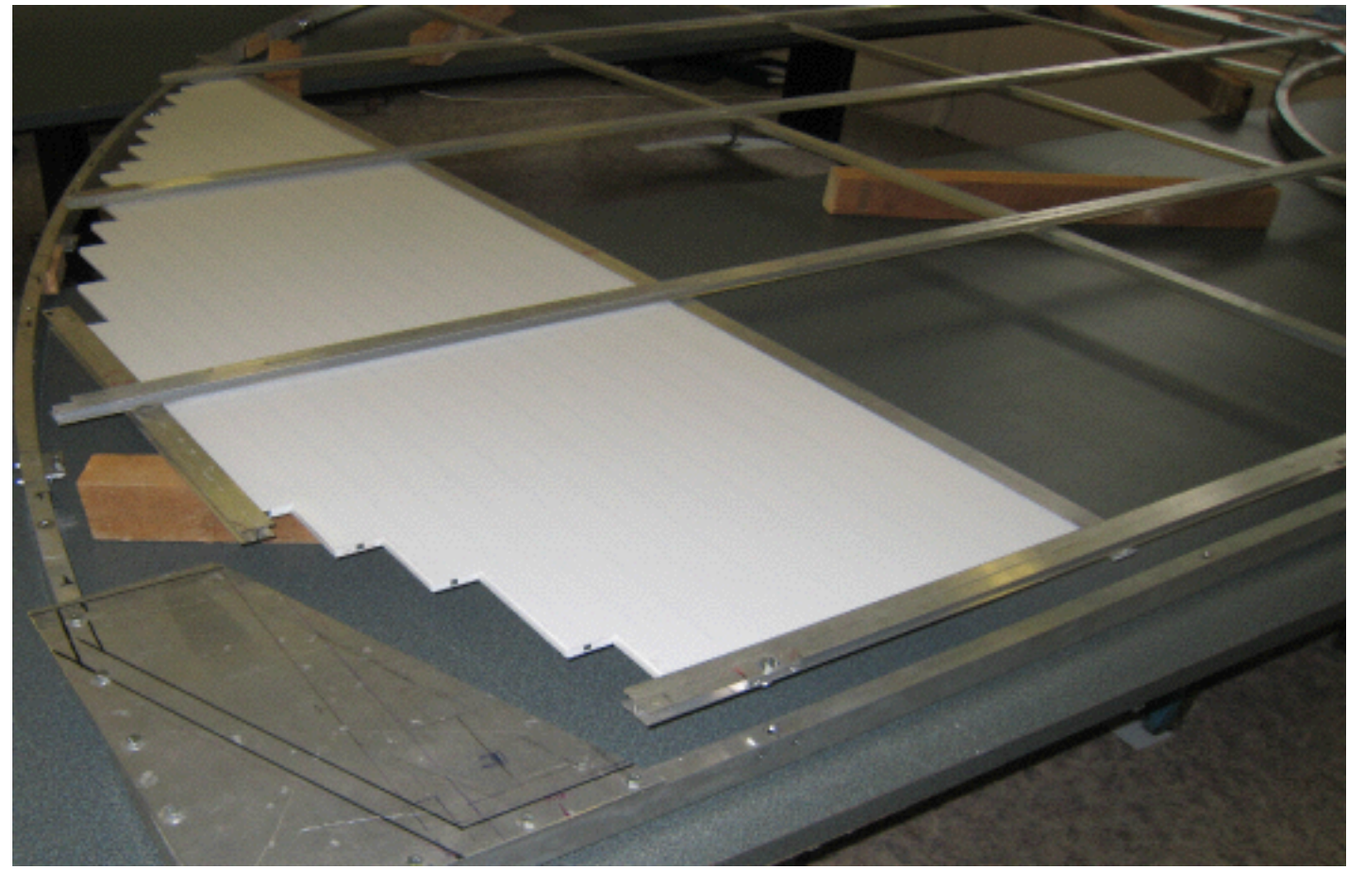

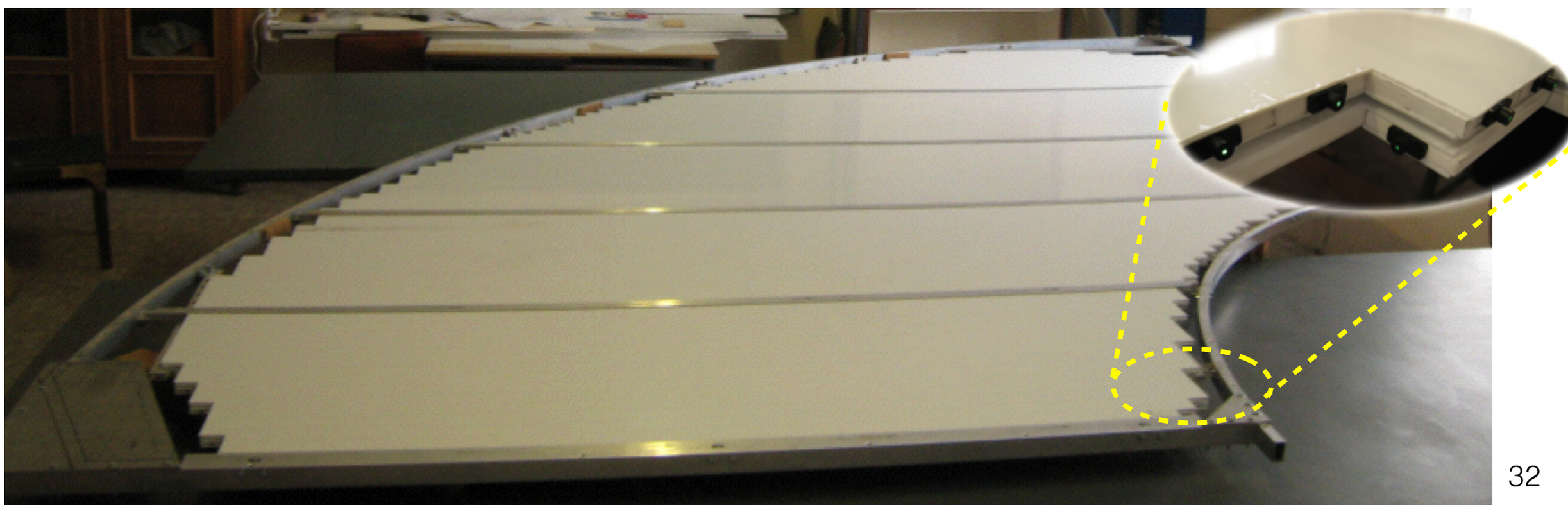

Scintillator (with TiO_2 reflective coating) delivers blue light to central-bore WLS fibre

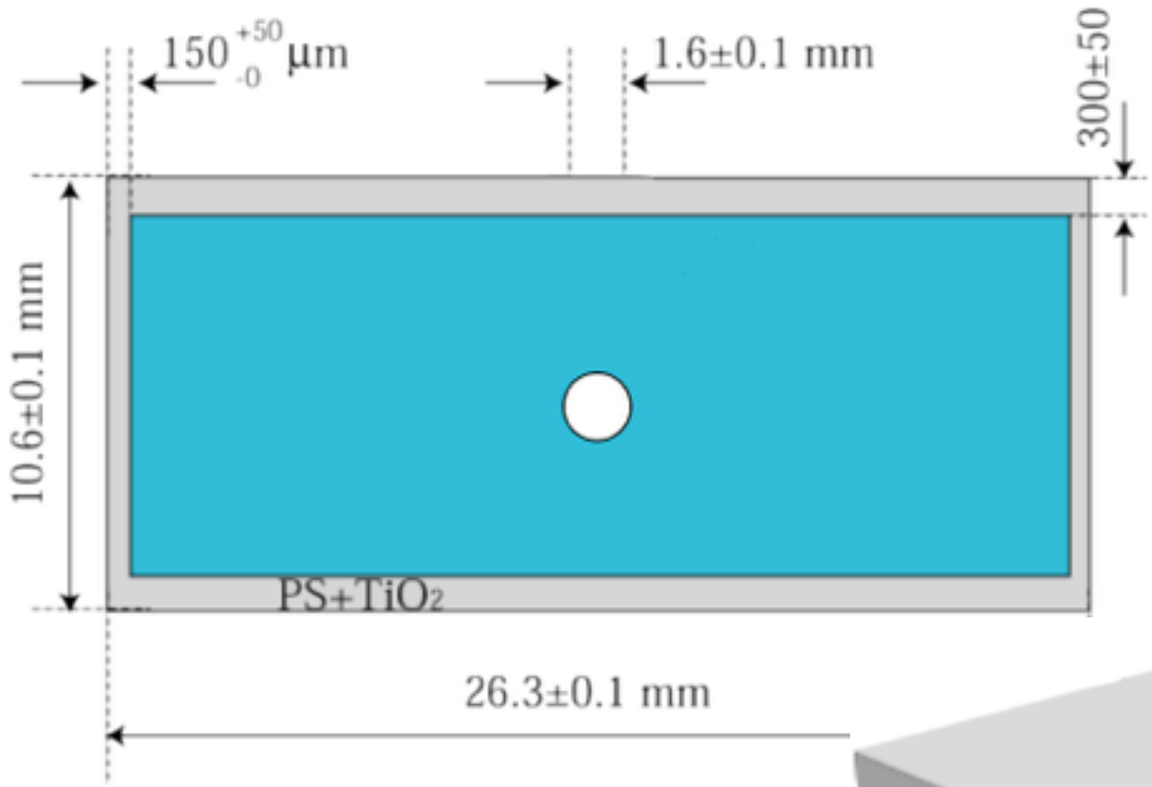

FNAL scintillator for barrel

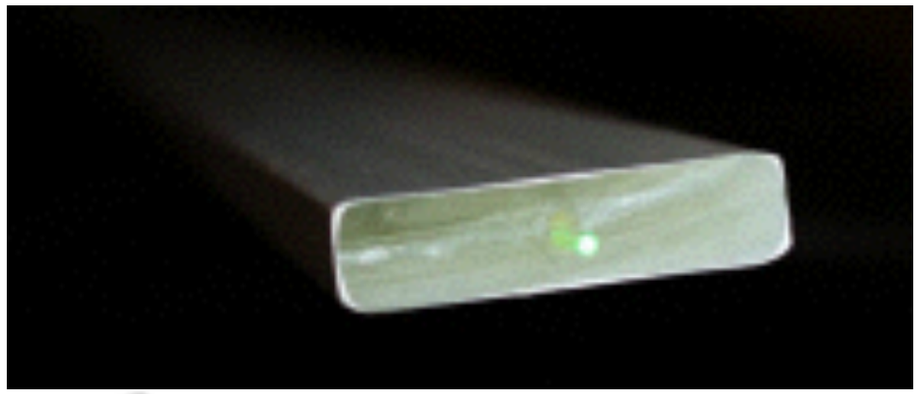

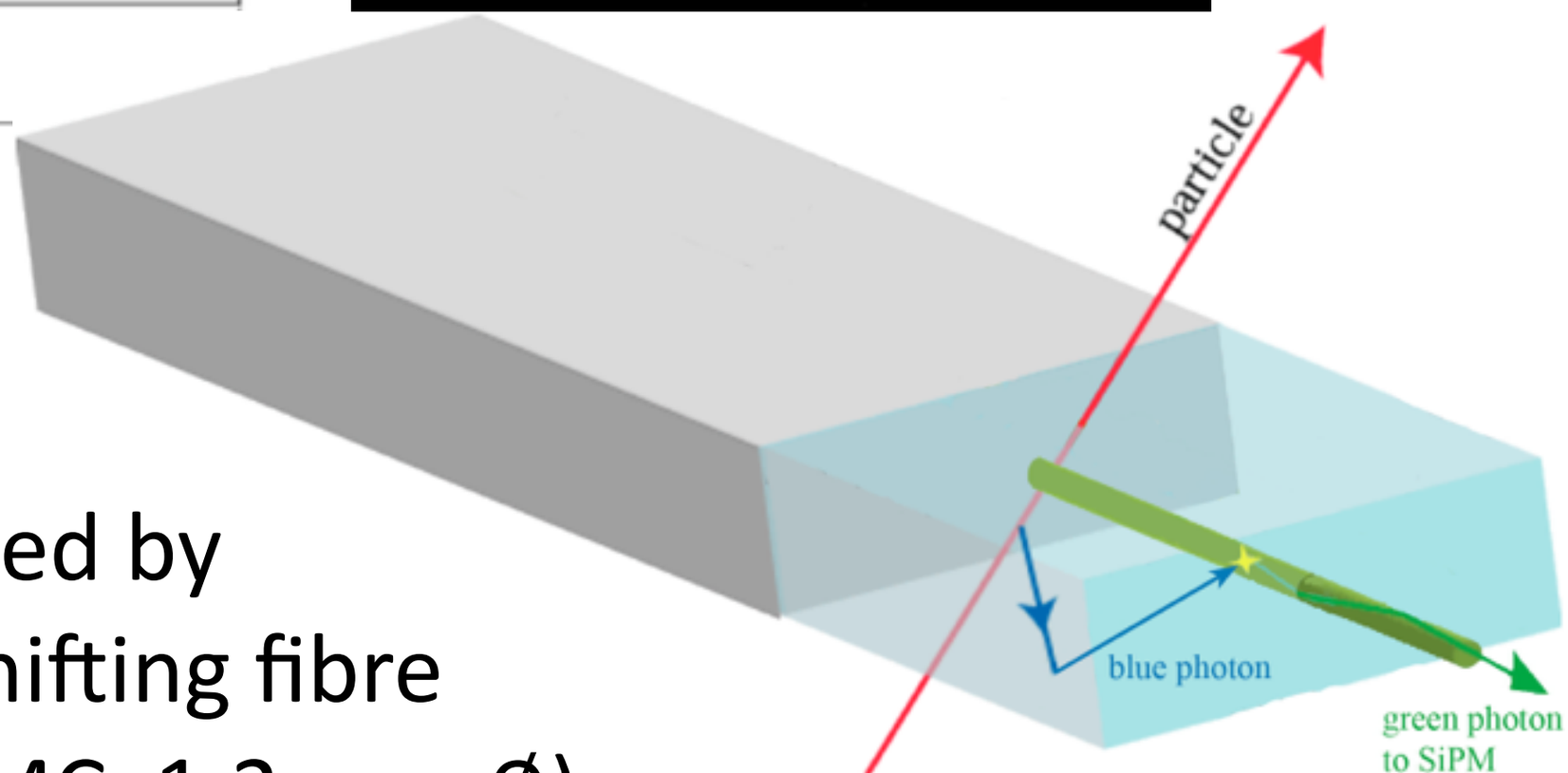

Light is captured by wavelength-shifting fibre (Kuraray Y11 MC, 1.2 mm Ø)

Questions, questions, questions …

30. Why use an optical fiber instead of letting the emitted light propagate along the scintillator *(a la light propagation in the iTOP)*?
31. How does the optical fiber channel the light?
32. Why a *wavelength-shifting* optical fiber?
33. Why is there a titanium dioxide layer on the outside?

Barrel scintillators extruded & cut to length at FNAL-NICADD factory

Scint & TiO_2 co-extruder

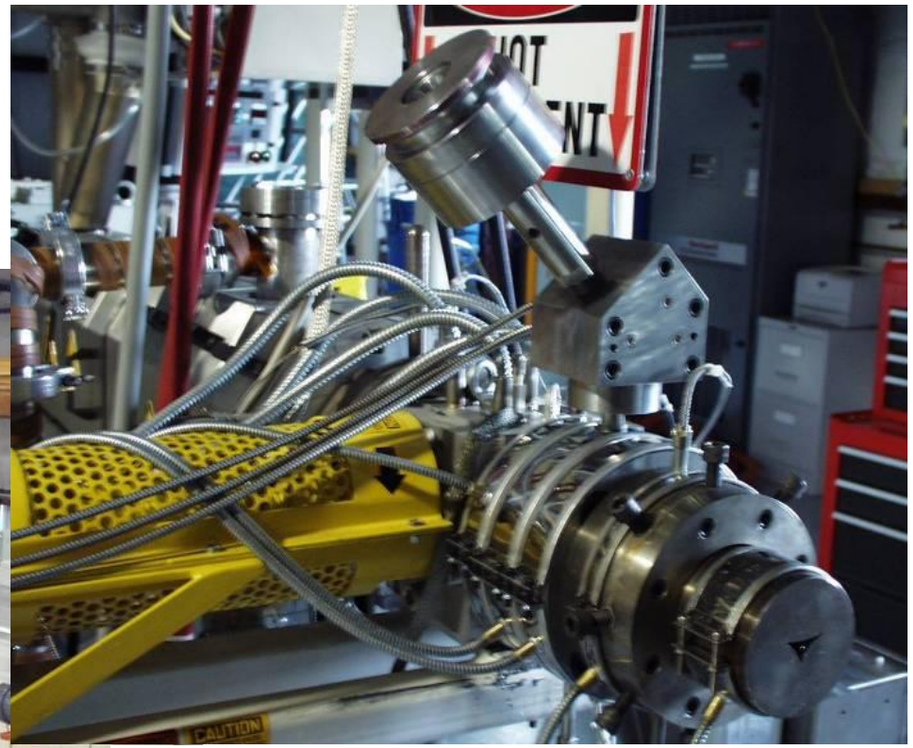

Production line

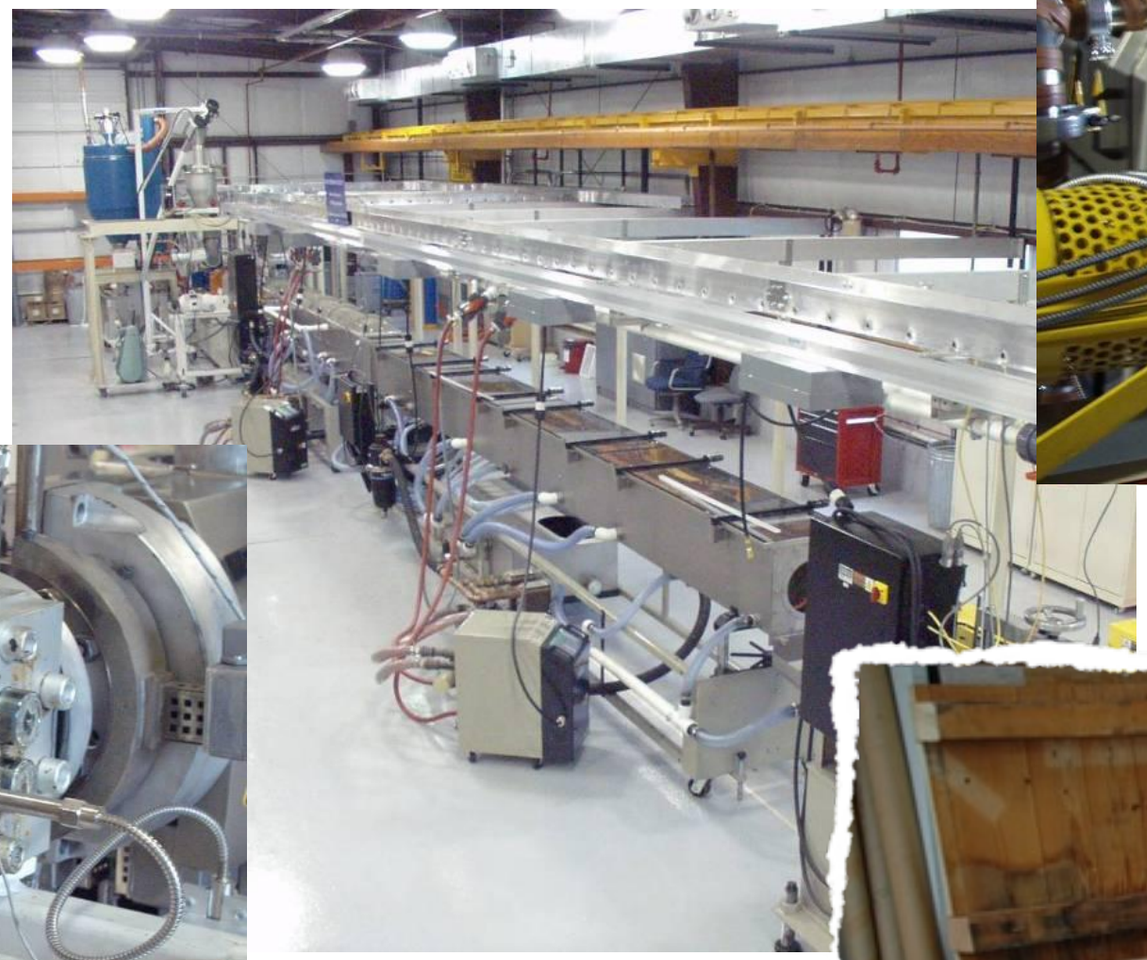

Custom die
(1x4 cm^2 for us)

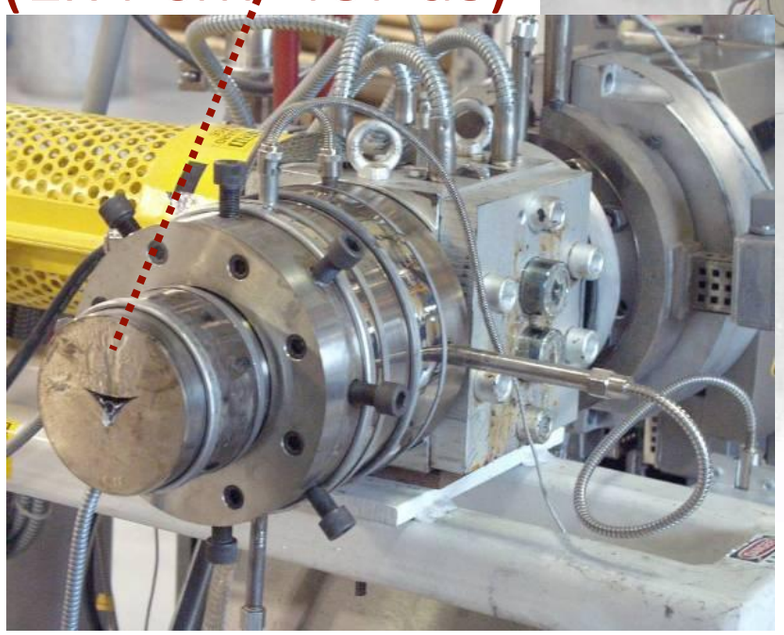

Endcap scintillator strips

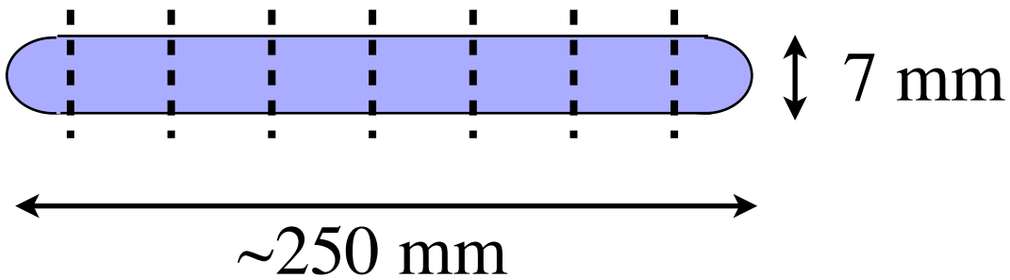

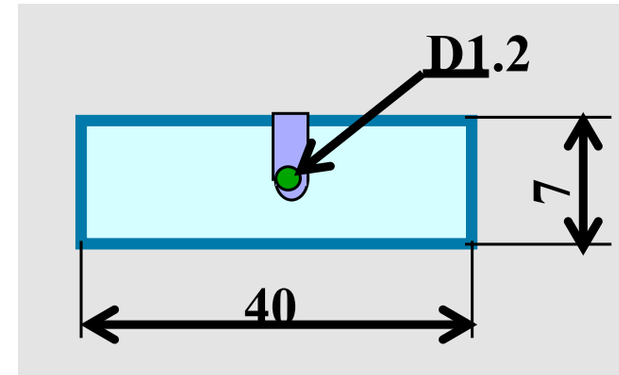

- Fabricated by Uniplast (Russia)
- Slab from extruding machine is sawed into rectangular strips, each 40 mm wide
- Reflective cover is produced by chemical etching of the strip surface (~50 µm)
- Groove for Kuraray Y-11 WLS fiber is sawed into the top surface (3mm deep)

Questions, questions, questions …

34. Why are the endcap and barrel strips not the same?

Detect WLS-fibre light with SiPM (aka MPPC)

- SiPM: ("Silicon photomultiplier") or MPPC ("multipixel photon counter") is a Geiger-mode avalanche photodiode
- Hamamatsu S10362 attached to one end of the scintillator strip
- fibre is mirrored at other end

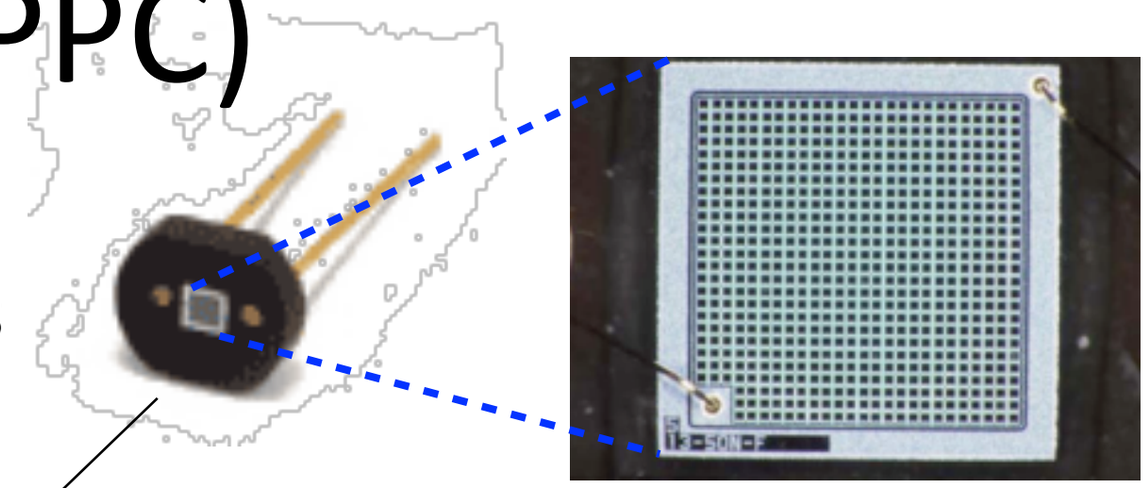

1.3 x 1.3 mm^2
667 pixels

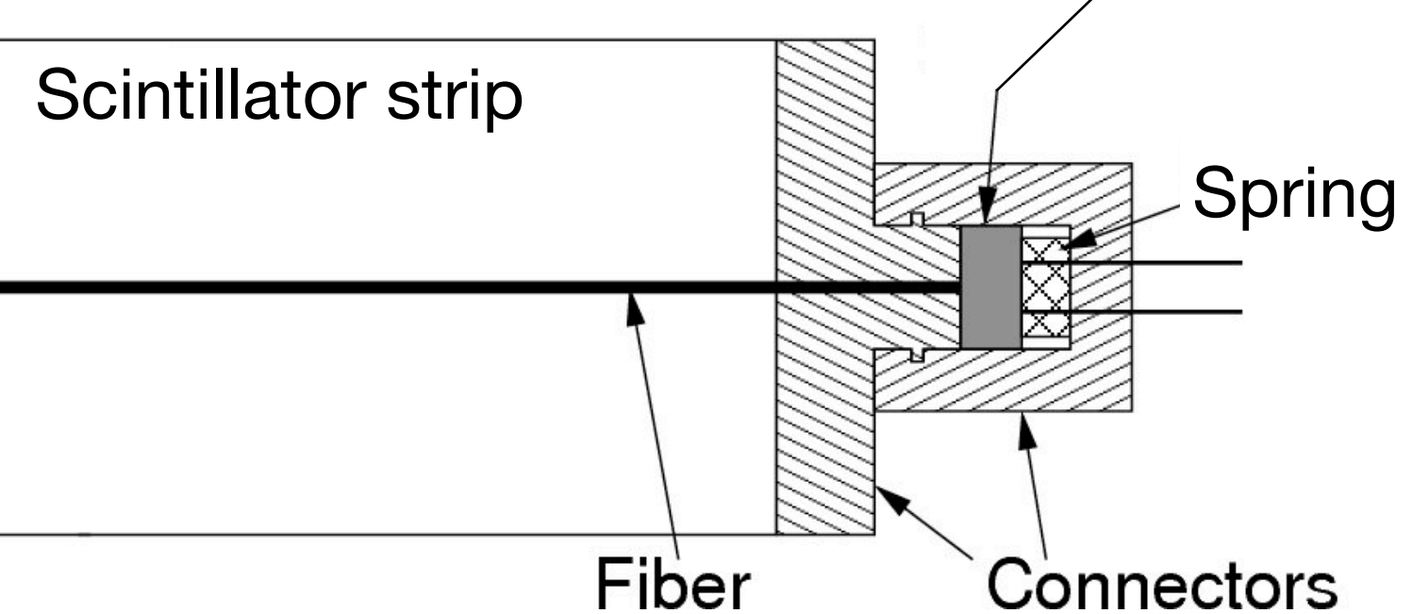

- ✓ developed for T2K near detector
- ✓ operates in 1.5 T magnetic field
- ✓ rad-hard (>10-year lifetime in Belle II environment)
- ✓ 8-pixel threshold gives ε > 99%

Questions, questions, questions …

35. How does the SiPM (MPPC) operate?
36. Two leads but four connections needed (±HV and ±signal) – ???
37. Compare the optical-fiber and MPPC dimensions.
38. If you were forced to use a traditional phototube, what design changes would you have to make?
39. If you were forced to use a multi-anode phototube, what design changes would you have to make?
40. Where else might such MPPCs be used in Belle II?

ITEP fiber+MPPC holders and Hamamatsu MPPCs

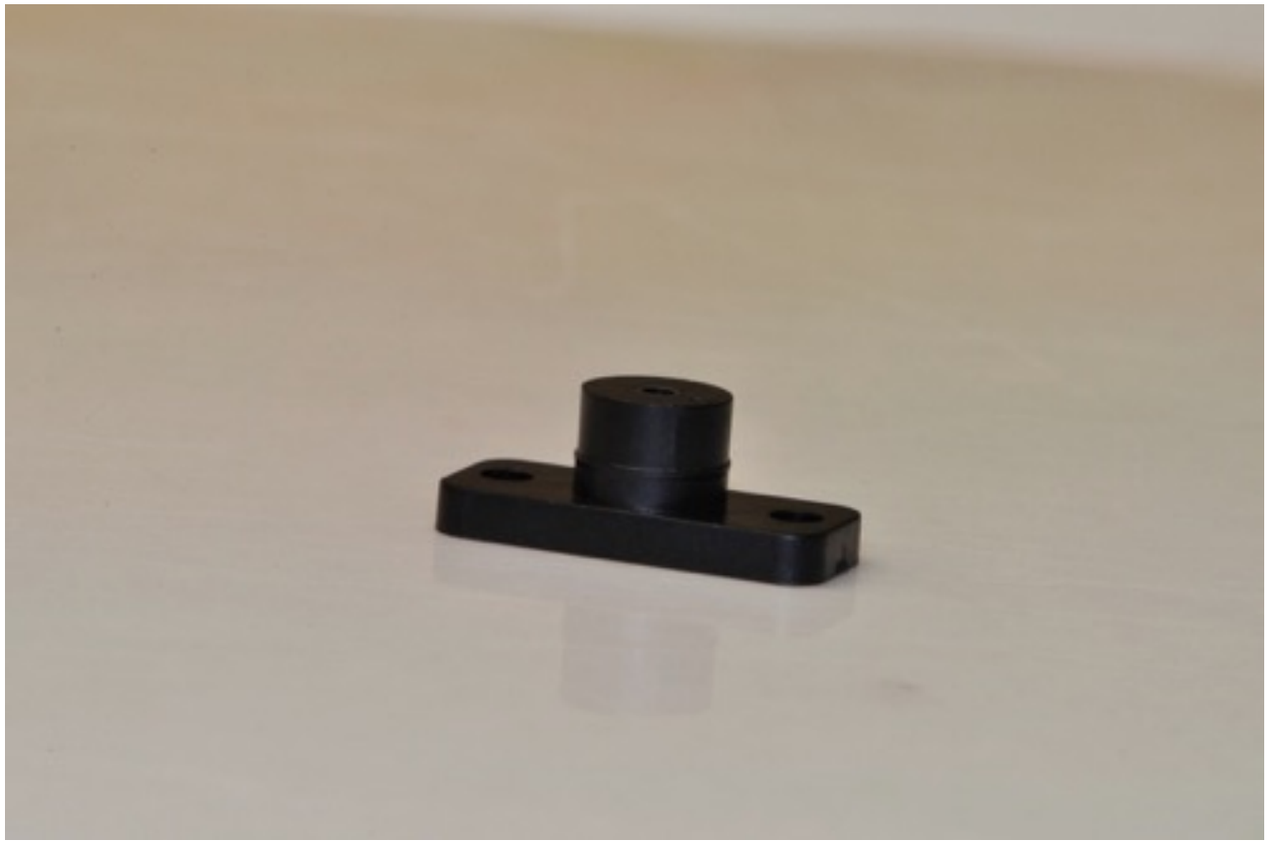

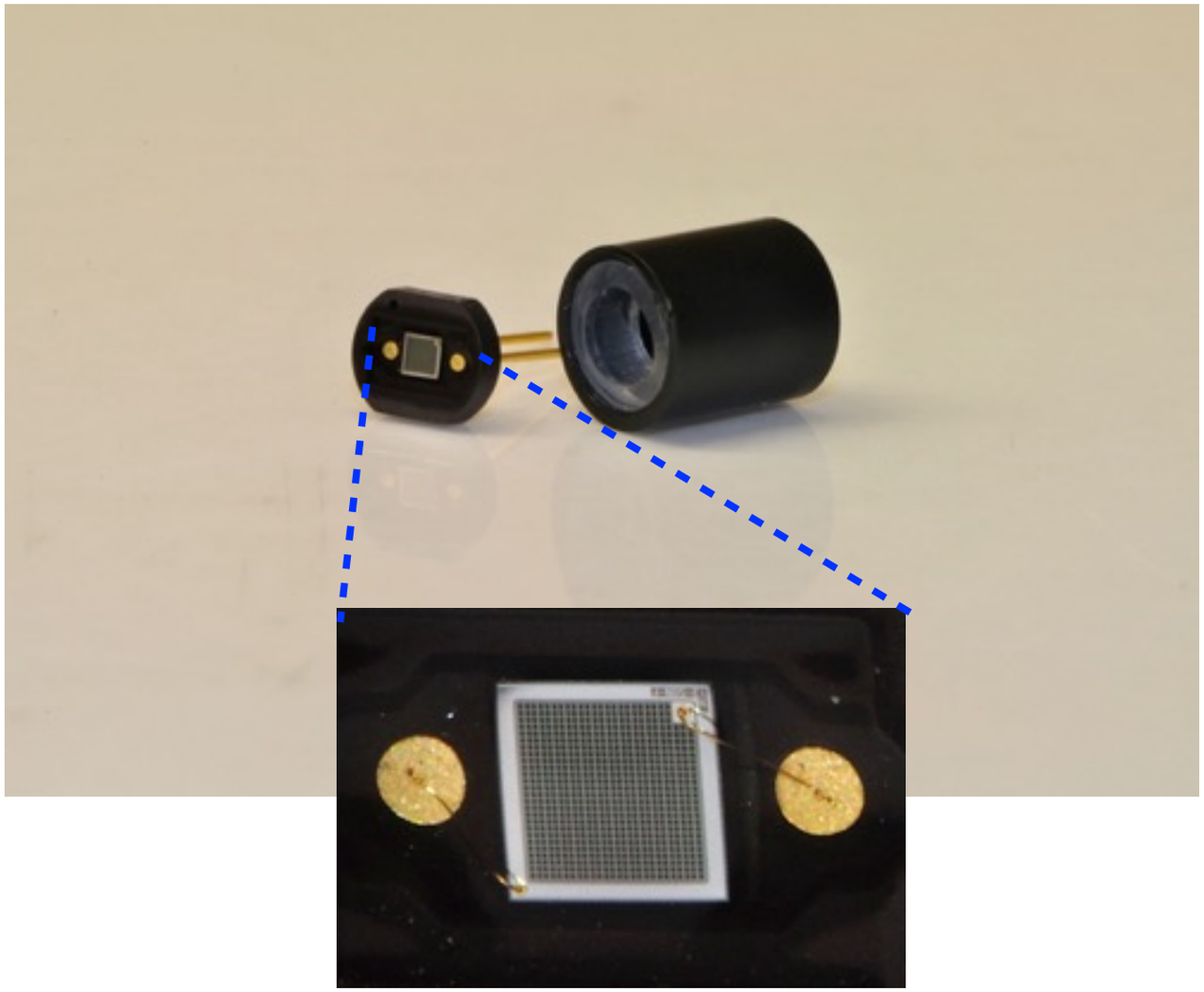

Hamamatsu S10362
photosensor active surface

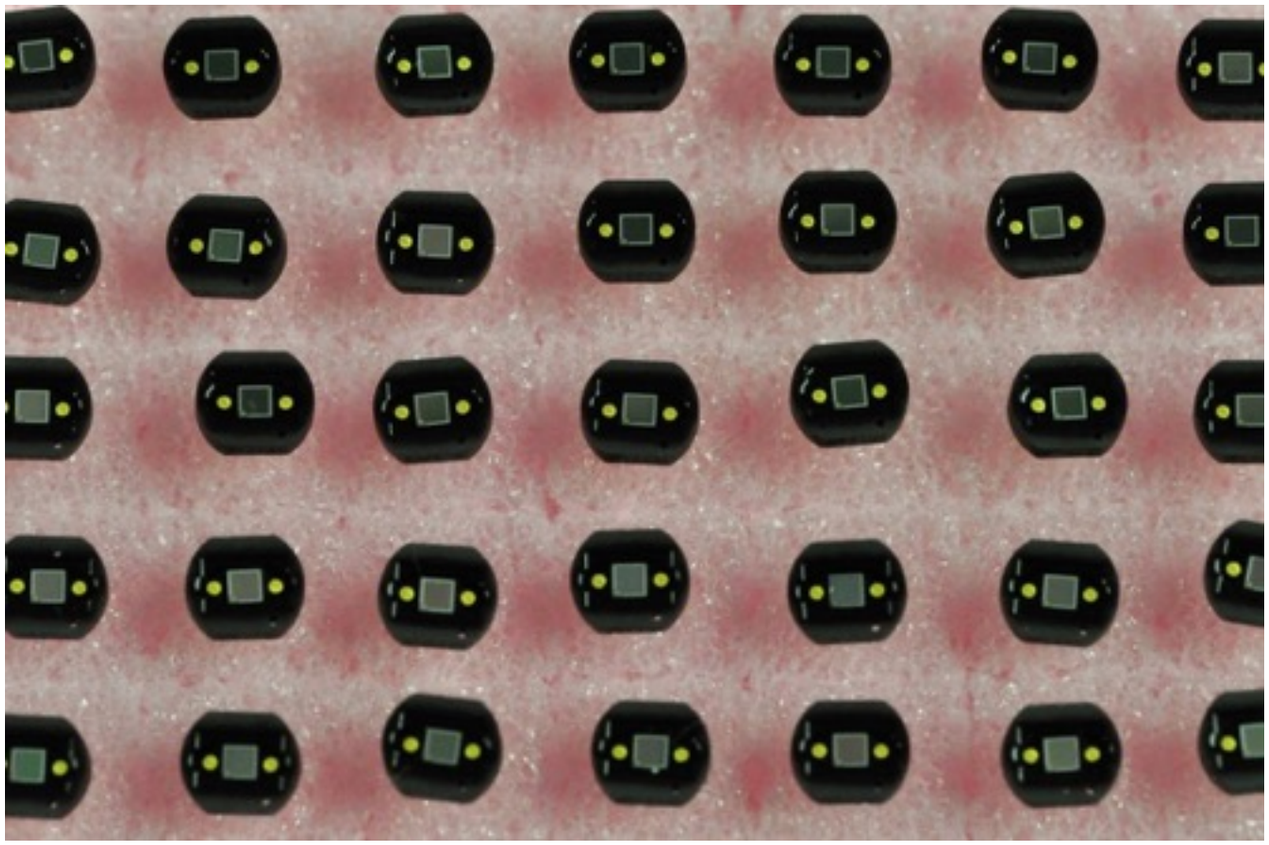

WLS fibre is epoxied to a ferrule that is epoxied to the scintillator strip

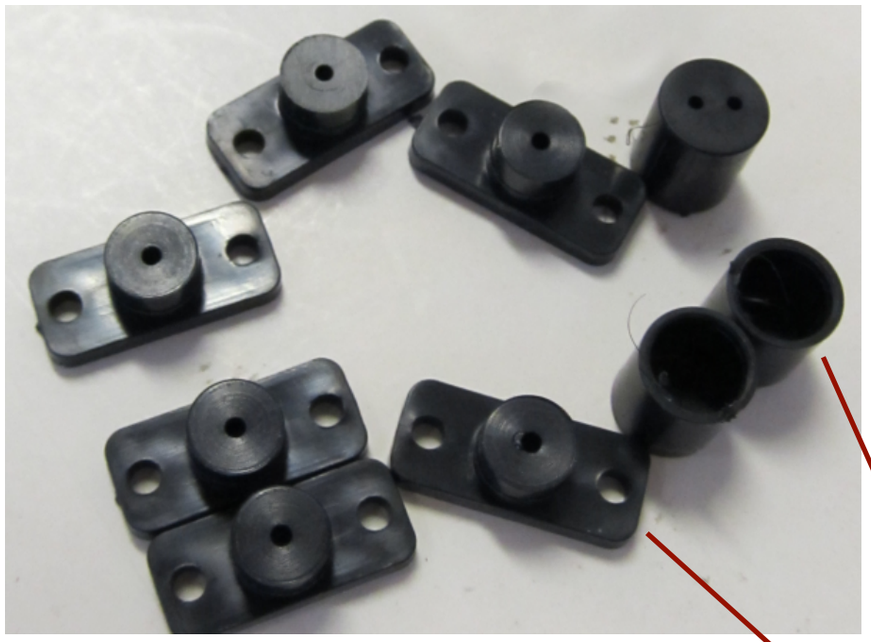

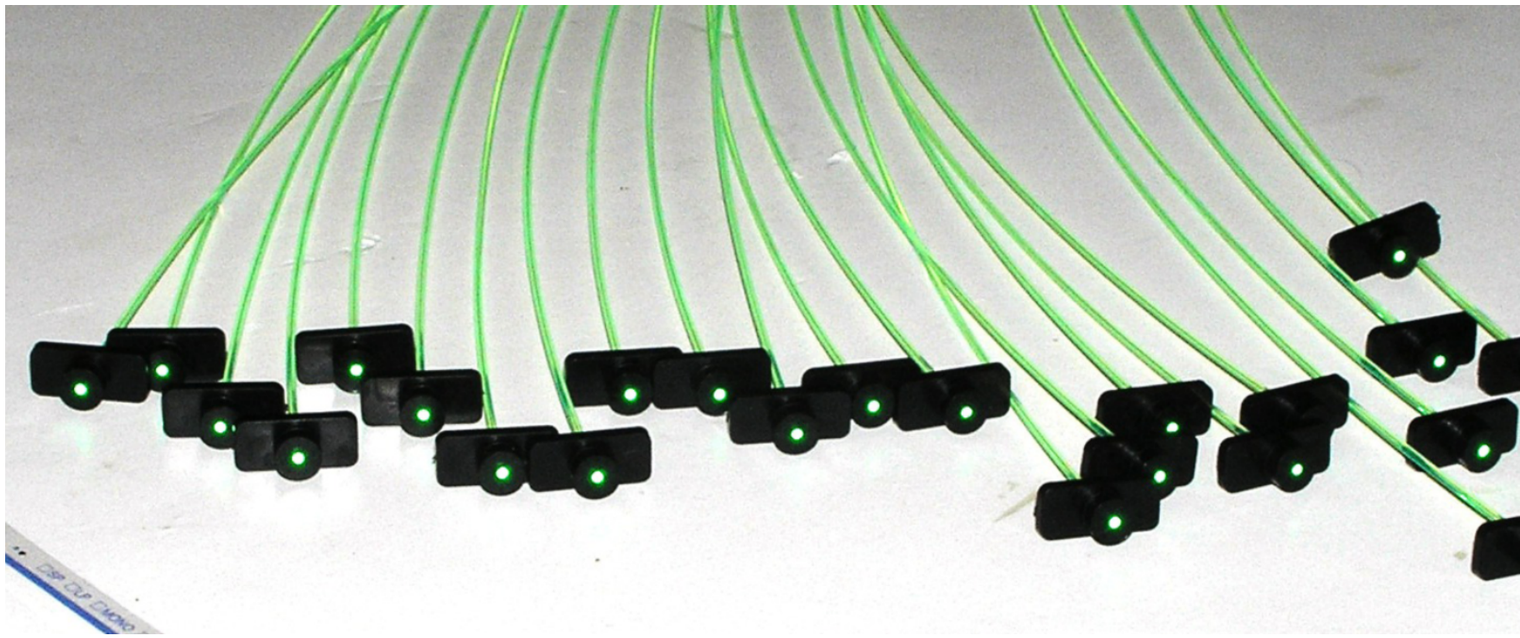

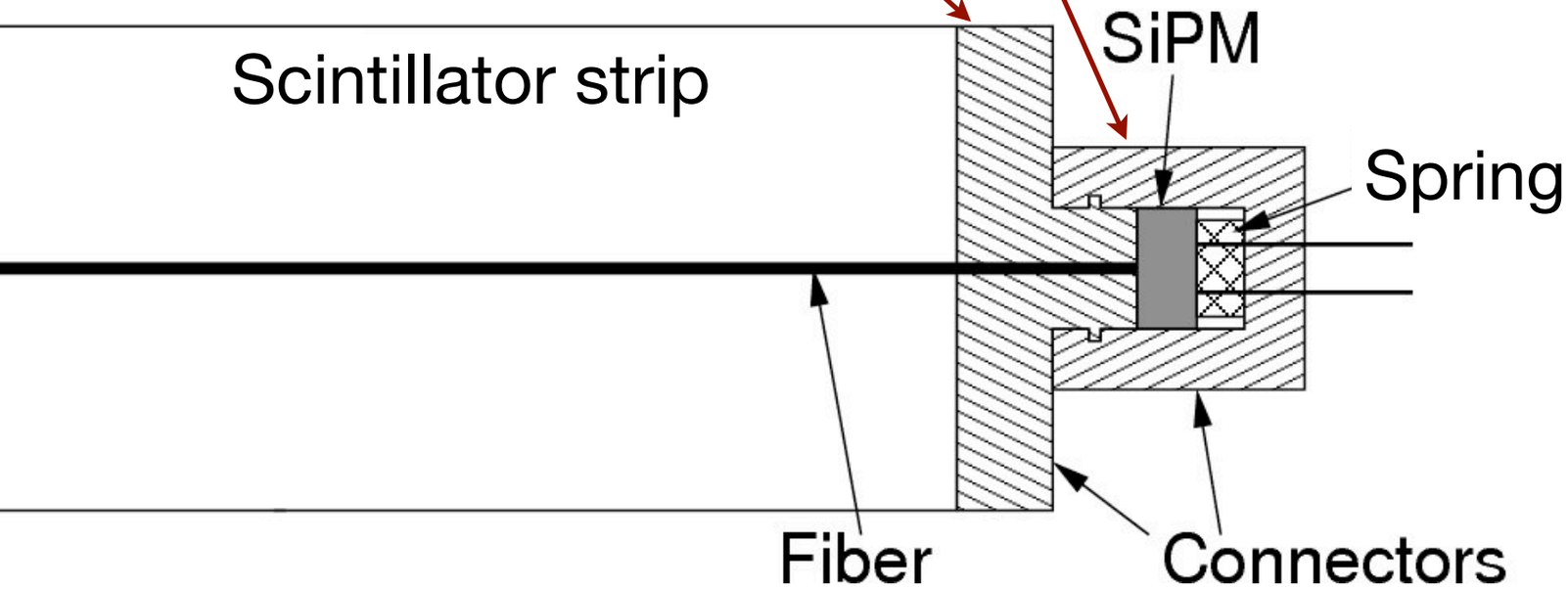

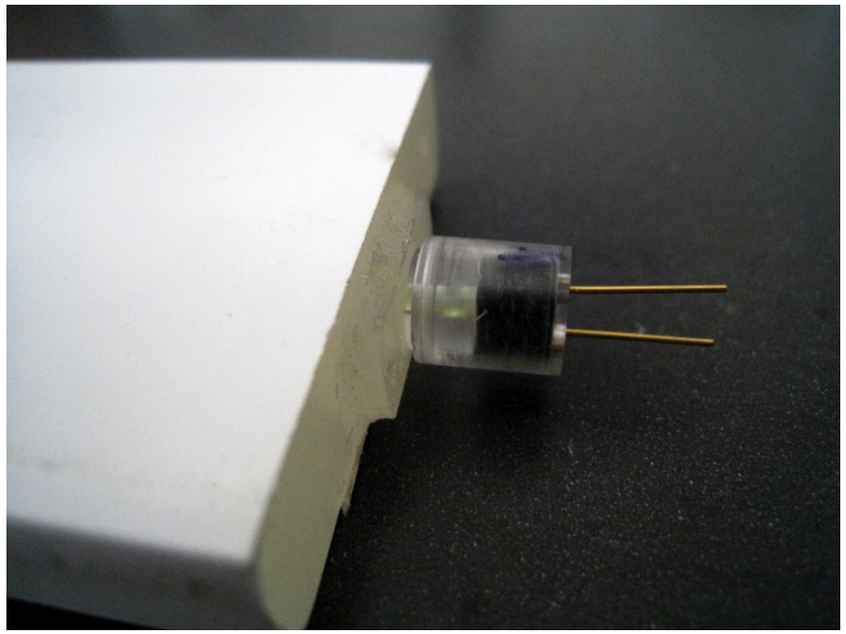

Endcap scintillator-fiber-MPPC assemblies

Barrel scintillator-fiber-MPPC assemblies

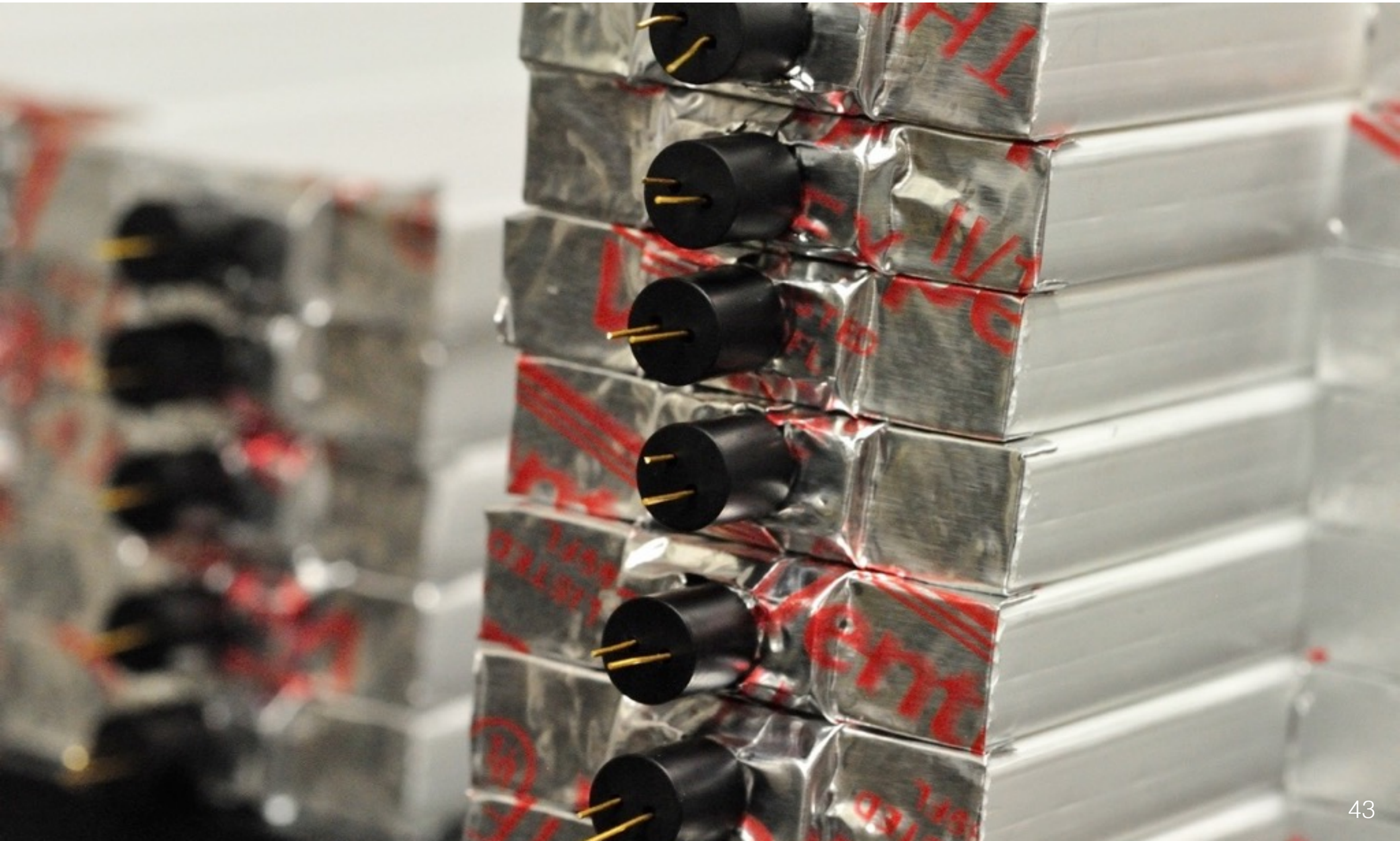

MPPC light collection improves by protruding the WLS fiber from its ferrule

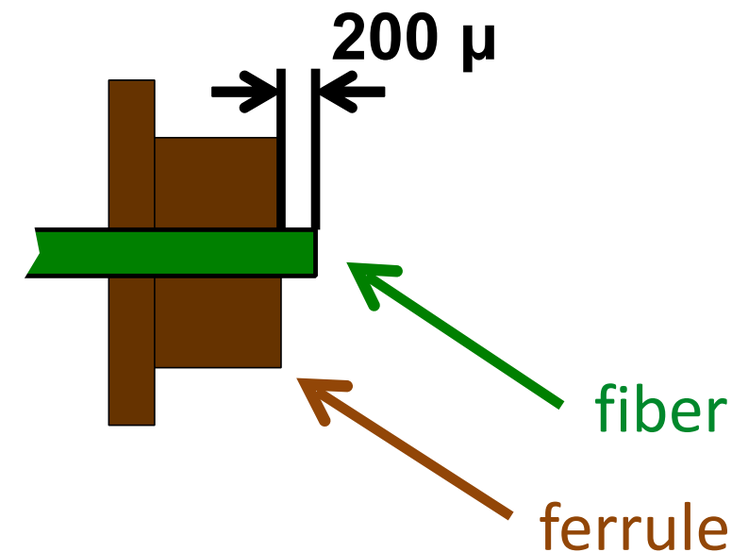

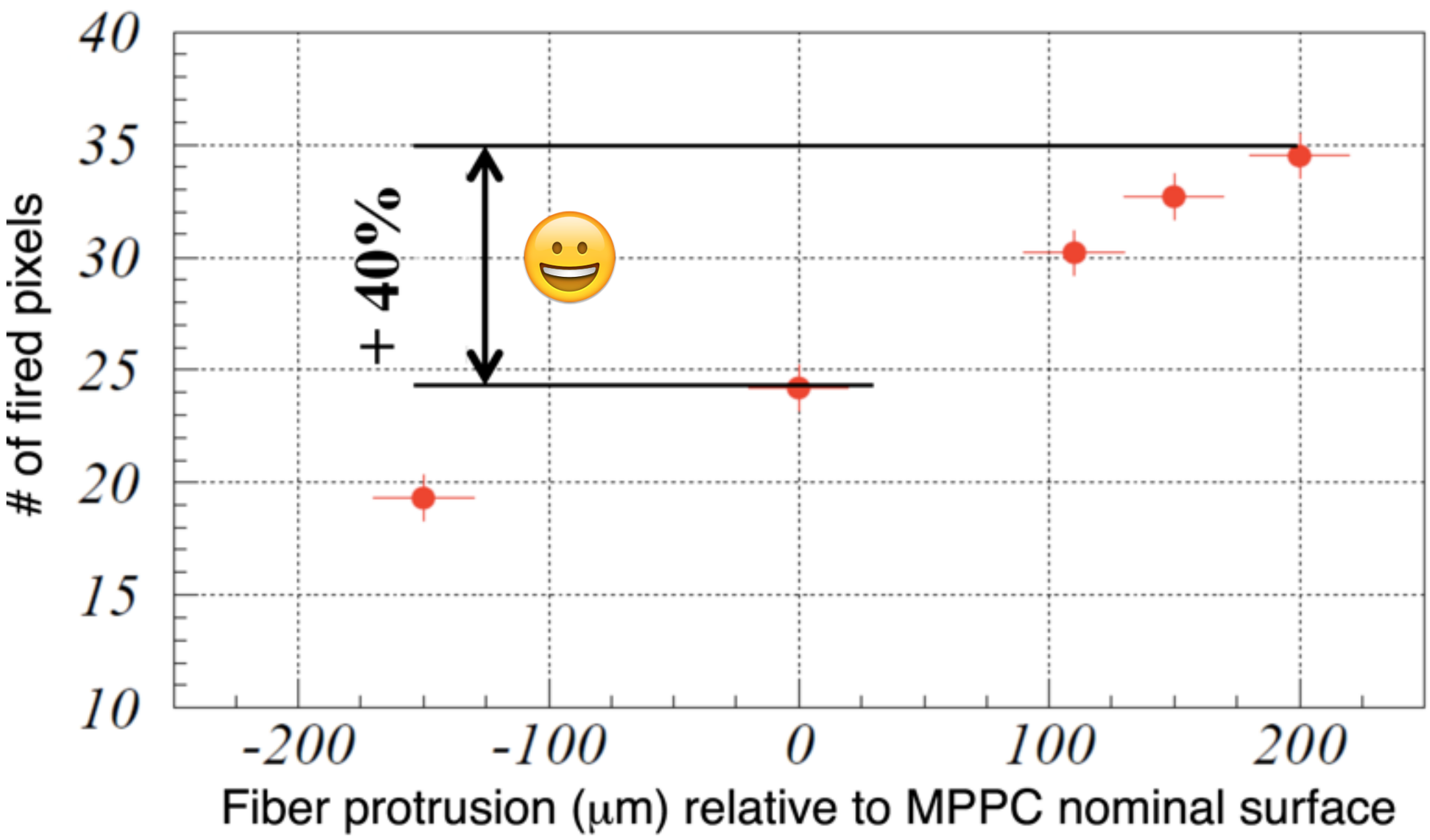

Questions, questions, questions …

41. Why does this protrusion improve the light-collection efficiency?

Radiation hardness of Hamamatsu MPPCs

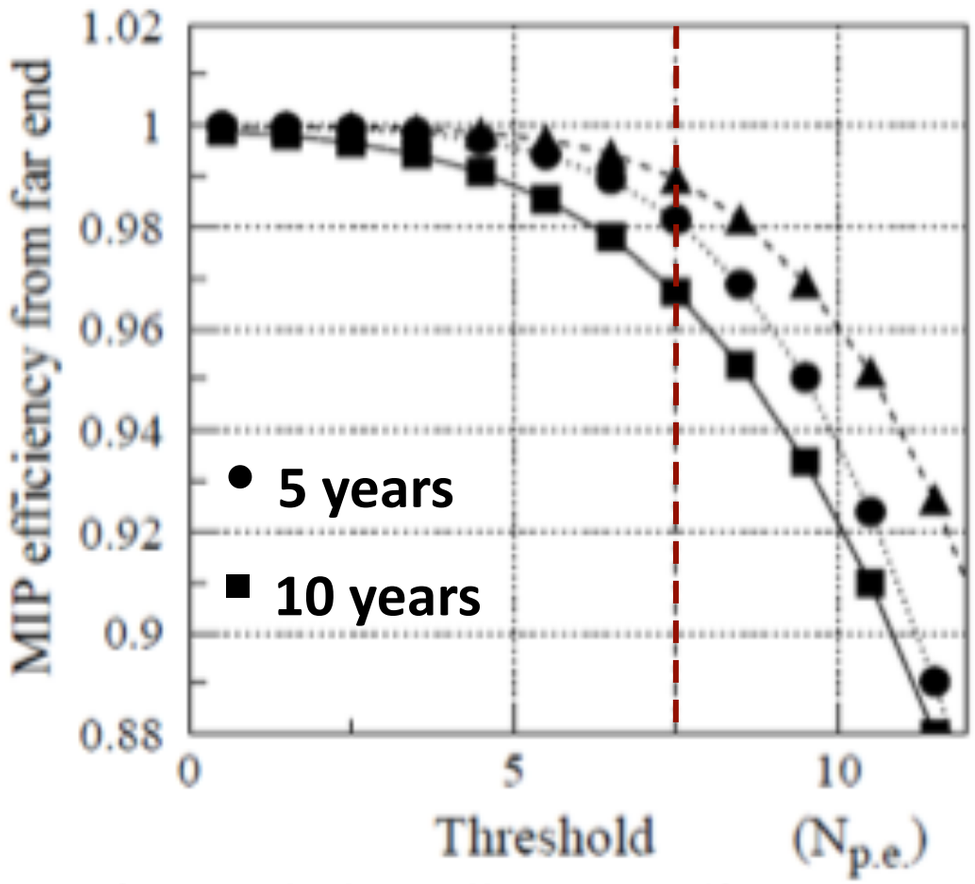

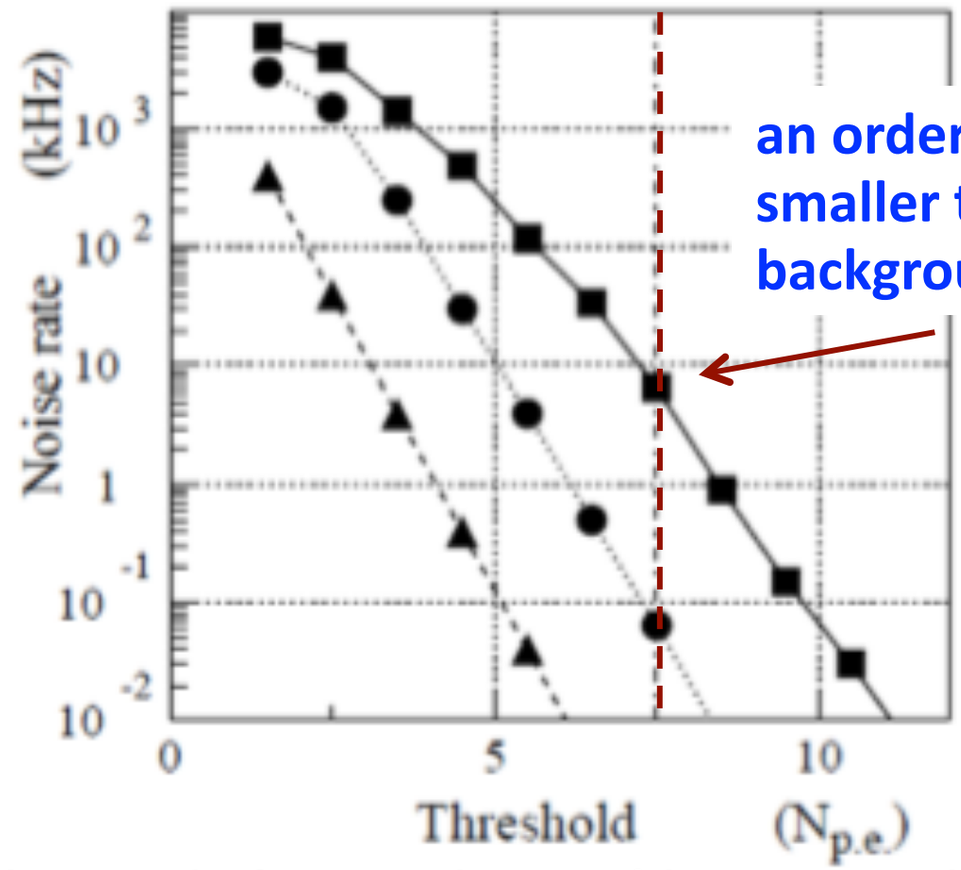

an order of magnitude smaller than physics background rate

No loss of SiPM light collection efficiency is observed after irradiation (dose equivalent to the 10 years Belle-II operation). The drop in MIP detection efficiency (99% → 97% at far end) is due to smearing of the threshold by noise – to be recovered by fit to the signal shape and local baseline in front-end electronics.

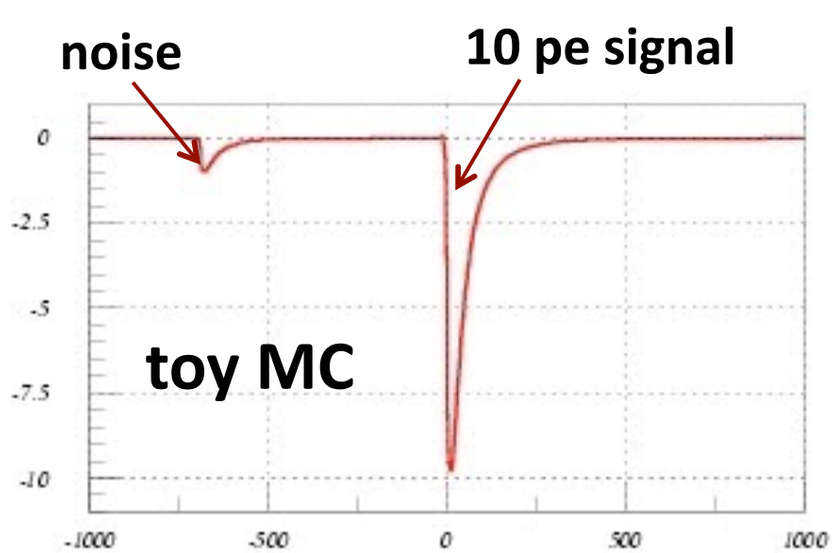

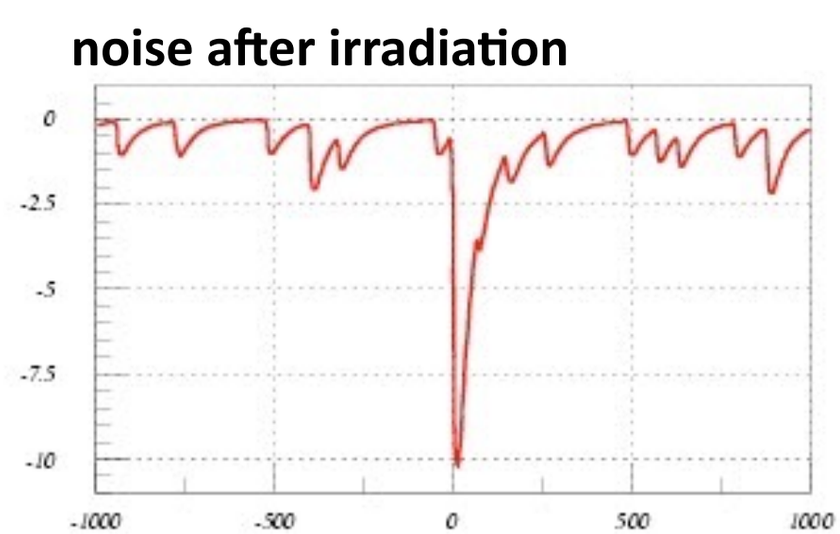

MPPC signals are pre-amplified

- MPPC power and output signal pre-amplification are managed by a custom circuit (on a carrier card, 15 channels/card) designed by U. Hawaii
- 10 of these cards (150 channels) are housed inside each detector superlayer

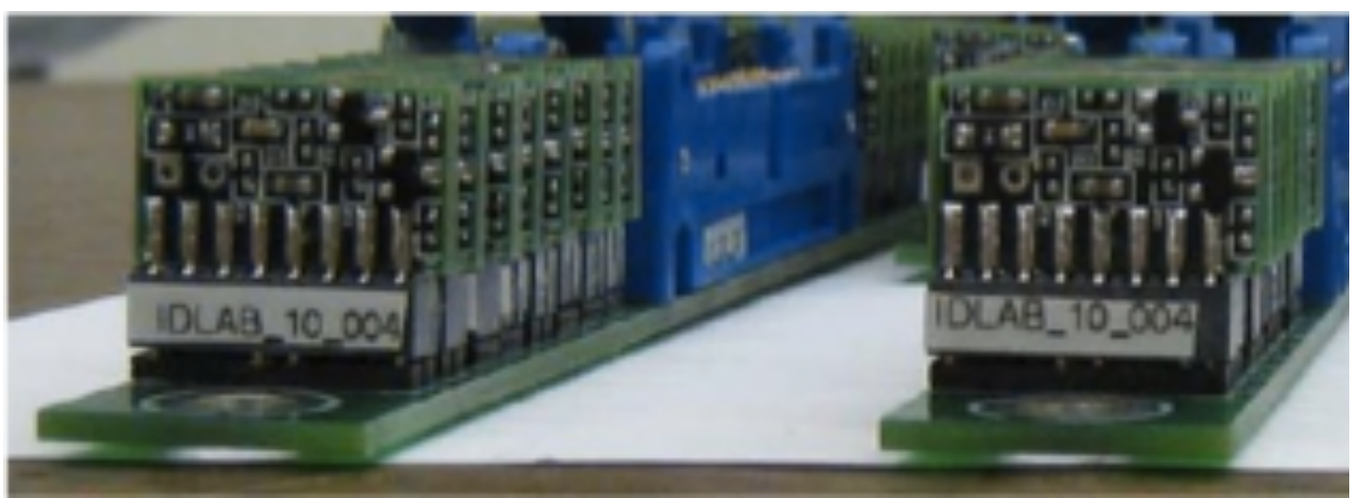

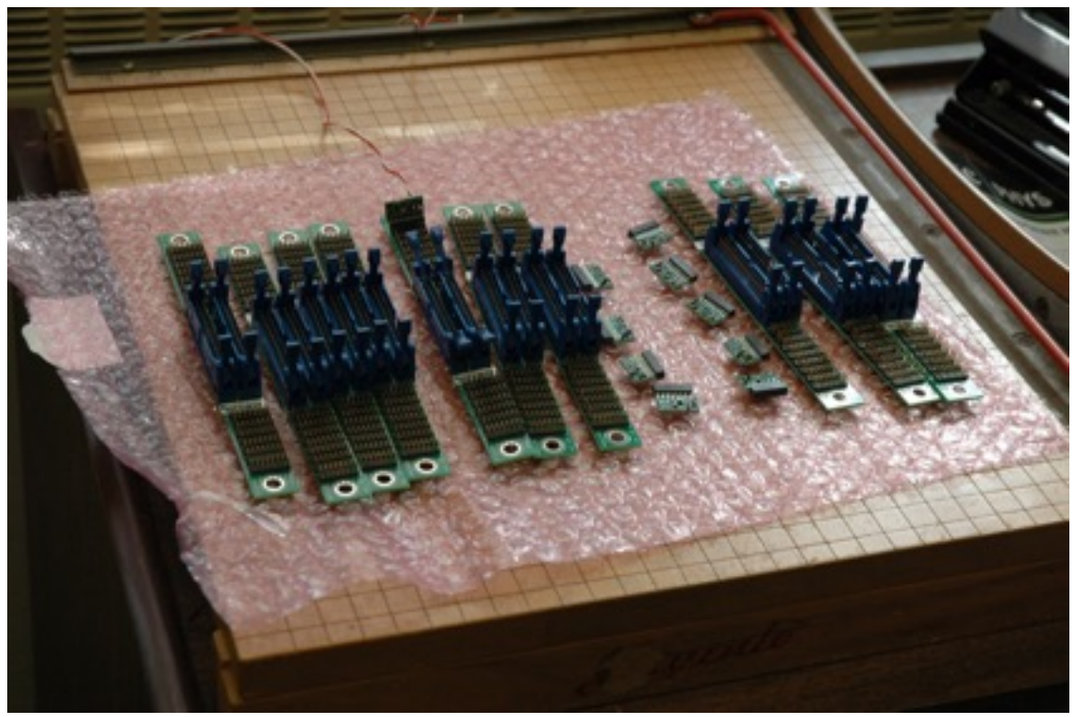

Preamplifiers are radiation-hard

- tested for radiation hardness at ITEP 200-MeV proton beam

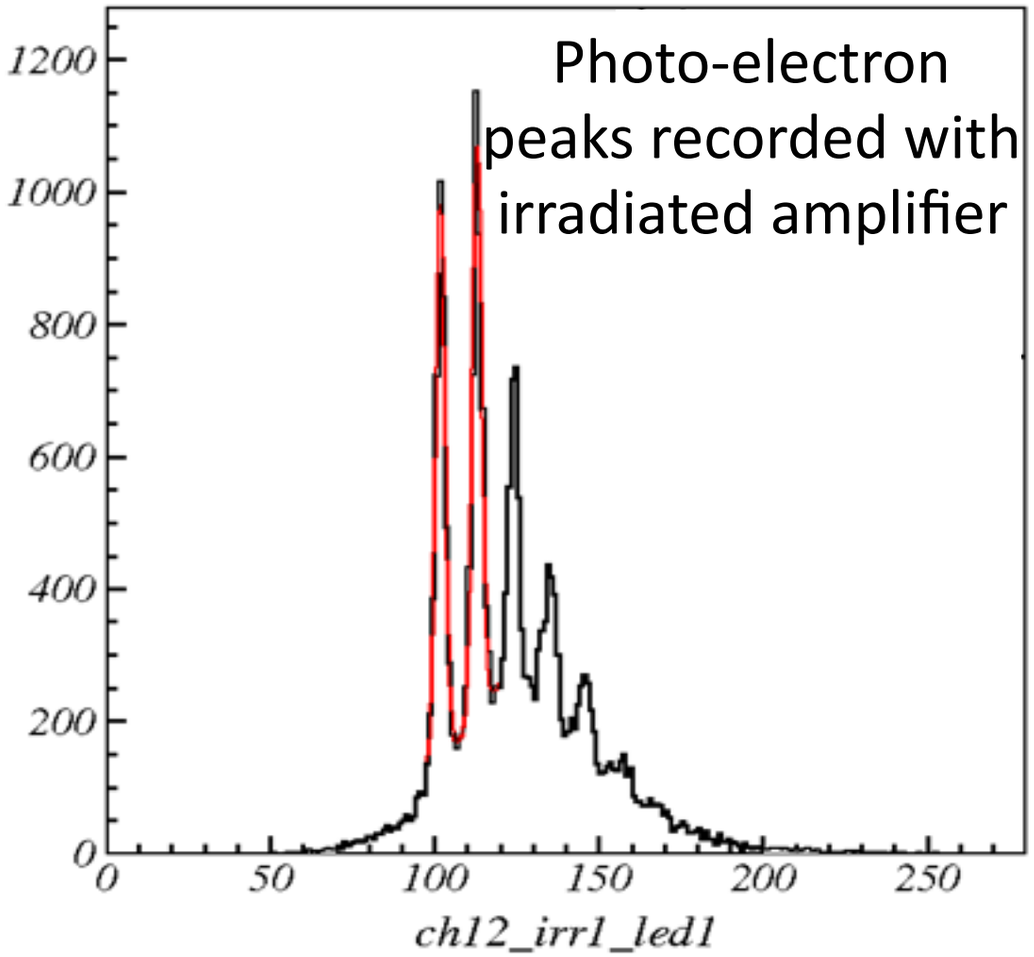

Amplifiers gain and noise measured before and after irradiation

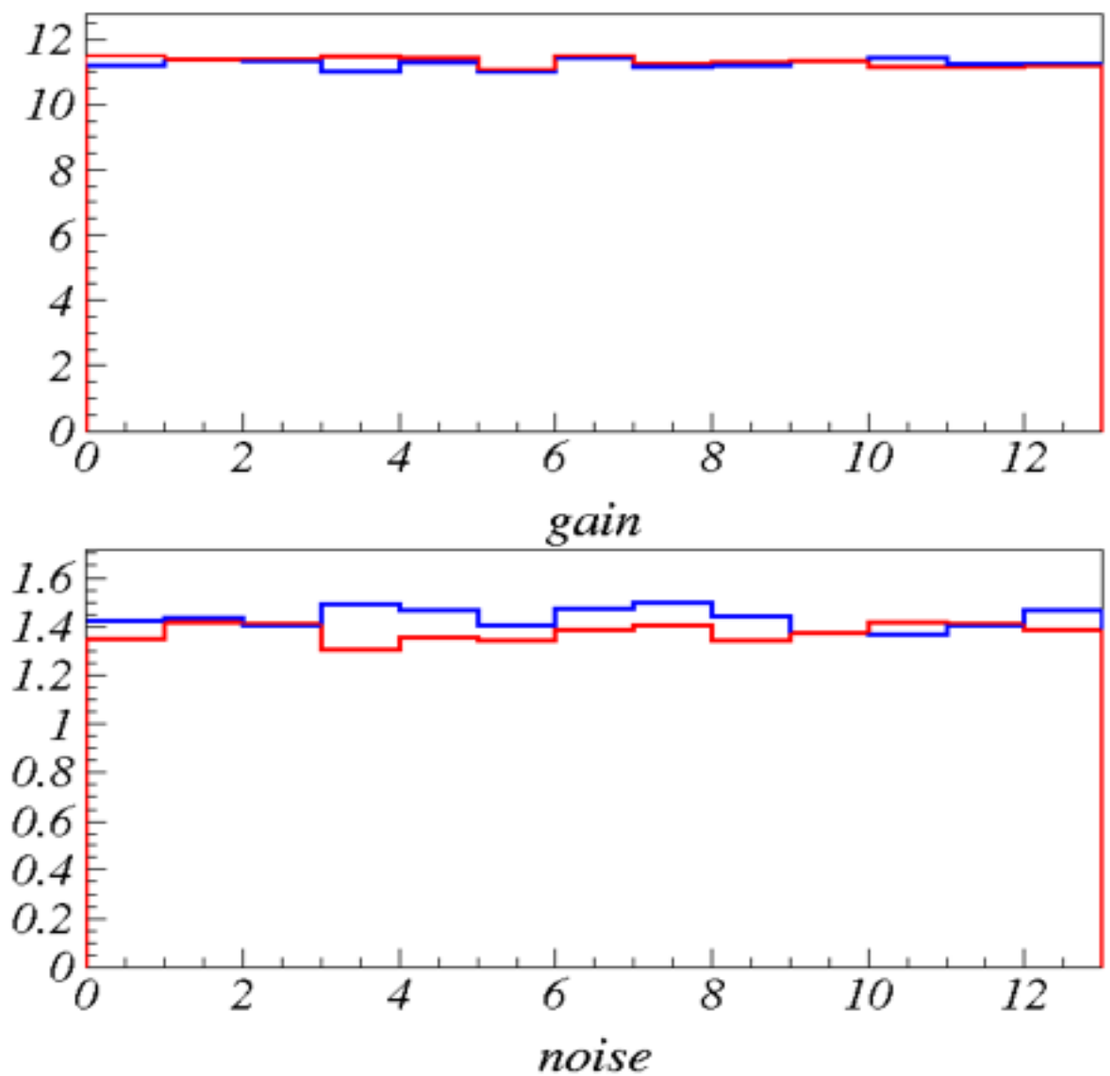

No effect observed with radiation doses 5x higher than expected at Belle II.

Pre-amplified signals are digitized by Hawaii-developed TARGETX ASIC

150 × IDL_10_004
BS_eKLM_amp_RevA

10×2×34-cond
Ribbon cables

inside detector

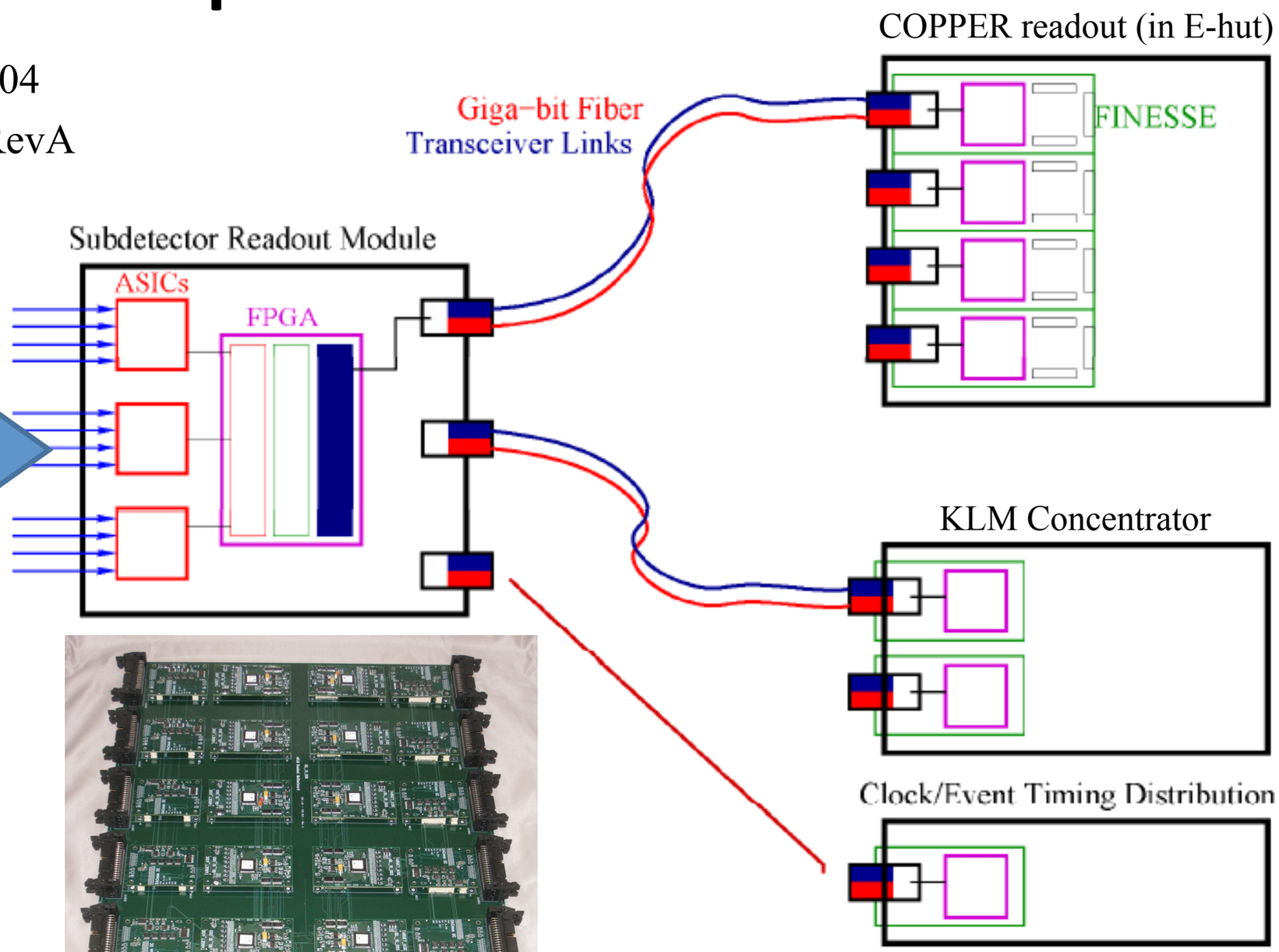

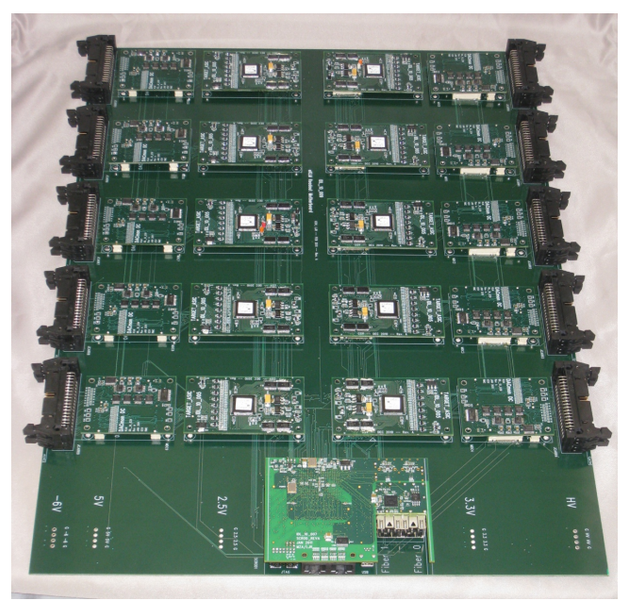

at magnet yoke

Scintillator front-end readout

TARGETX Daughter Card with transformers for common-mode noise reduction

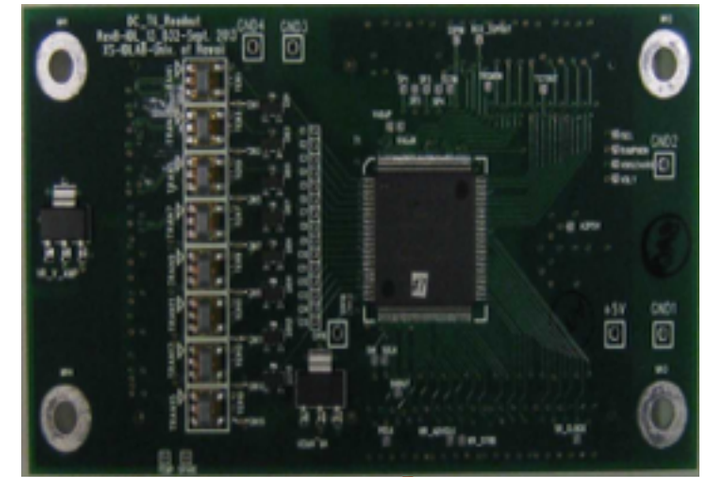

20 ribbon cables for MPPC power and signals attach to outboard RHIC card

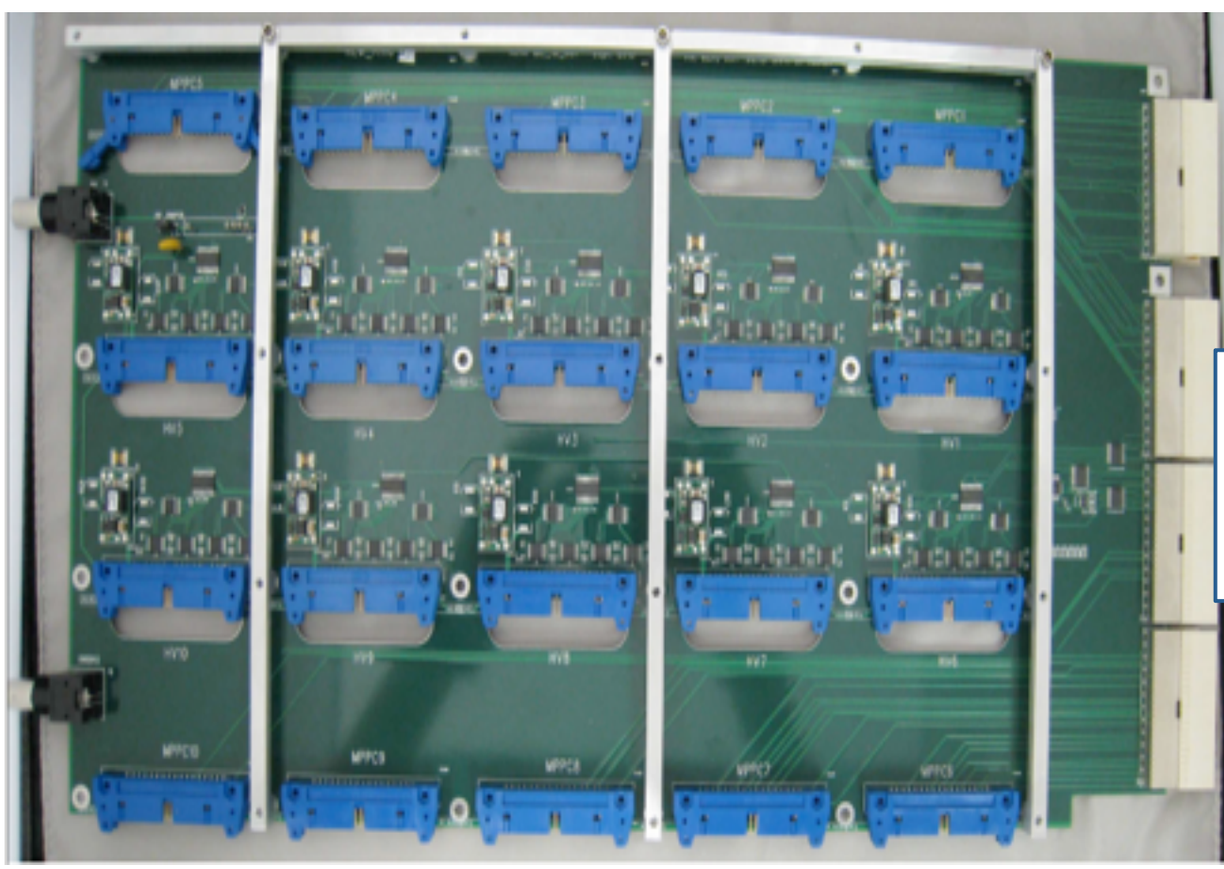

Ribbon Holder Interface Card

MPPC signals

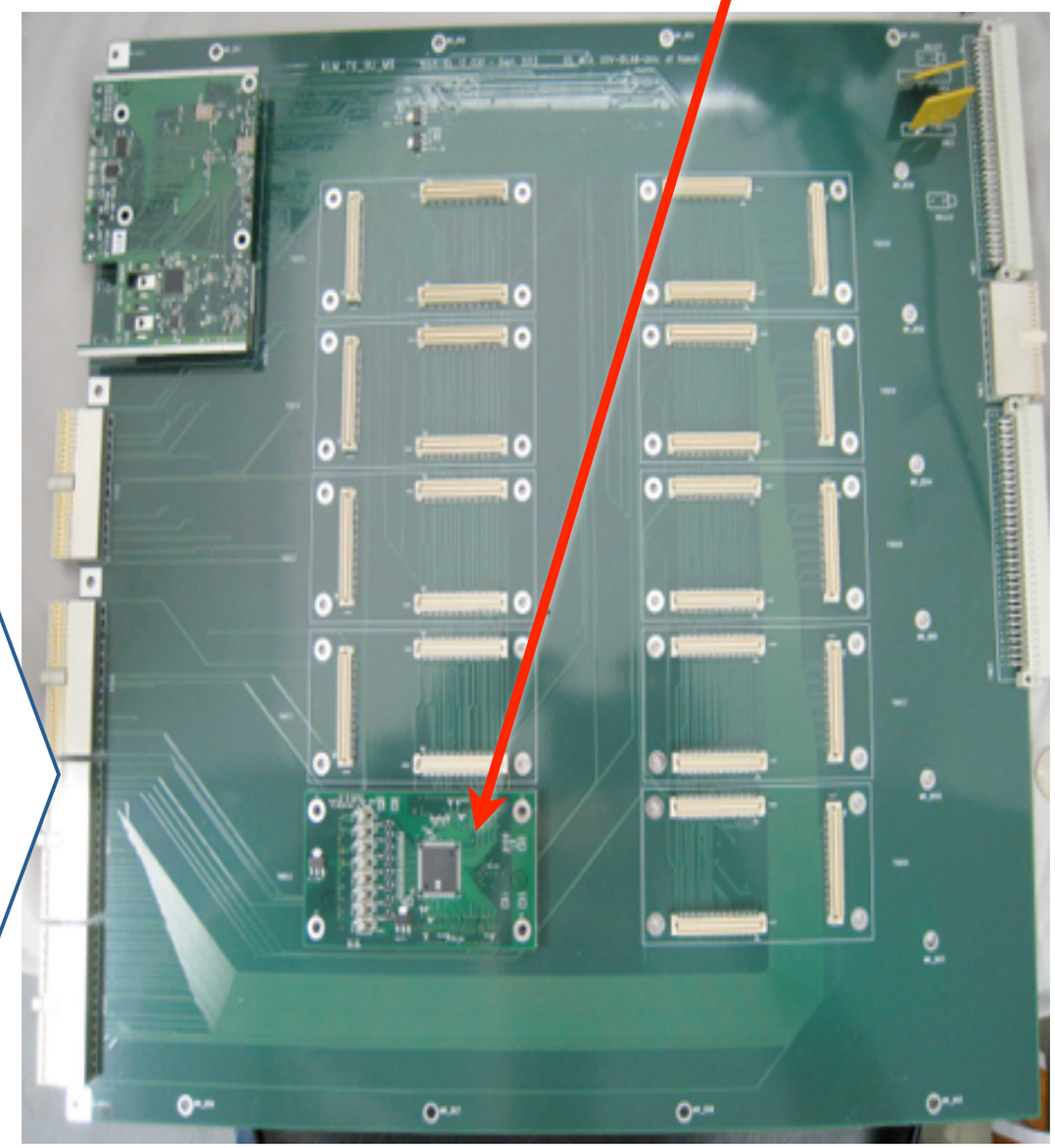

9U Motherboard for 10 daughter cards

RHIC card extends beyond front of motherboard in the COPPER crate

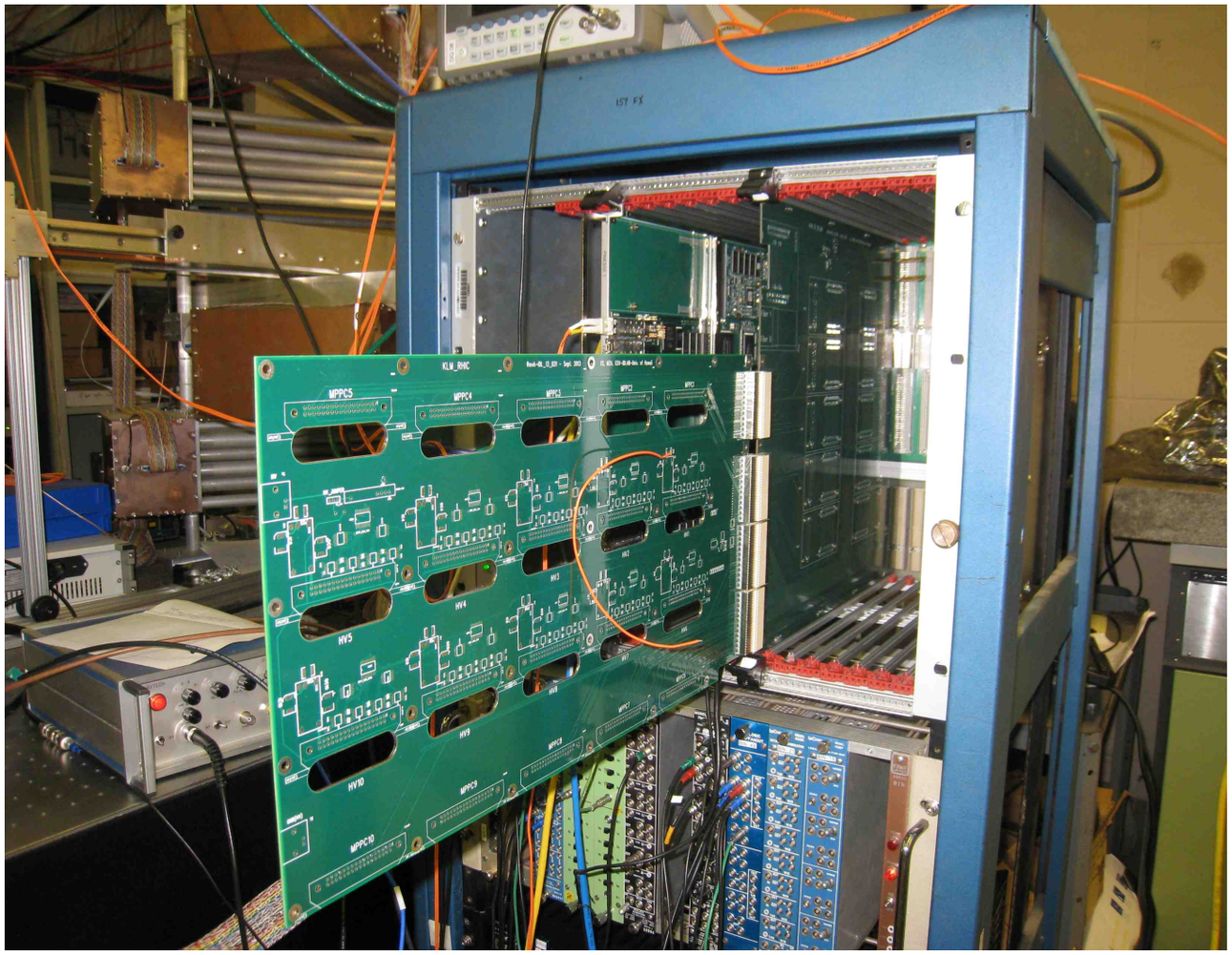

Ribbon cables (20/card) enter from below

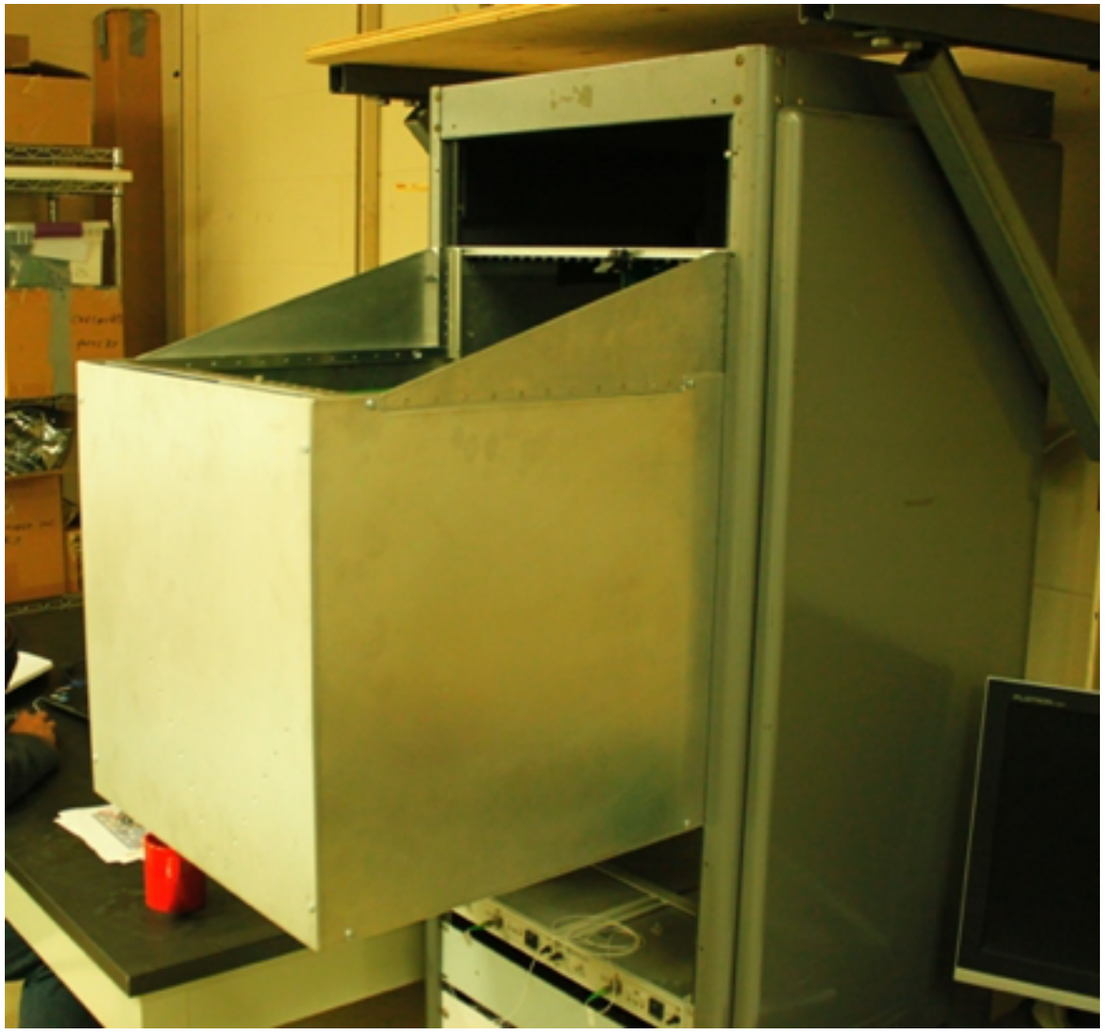

Exterior frame supports RHIC cards and cables

Front-End Board for RPC readout

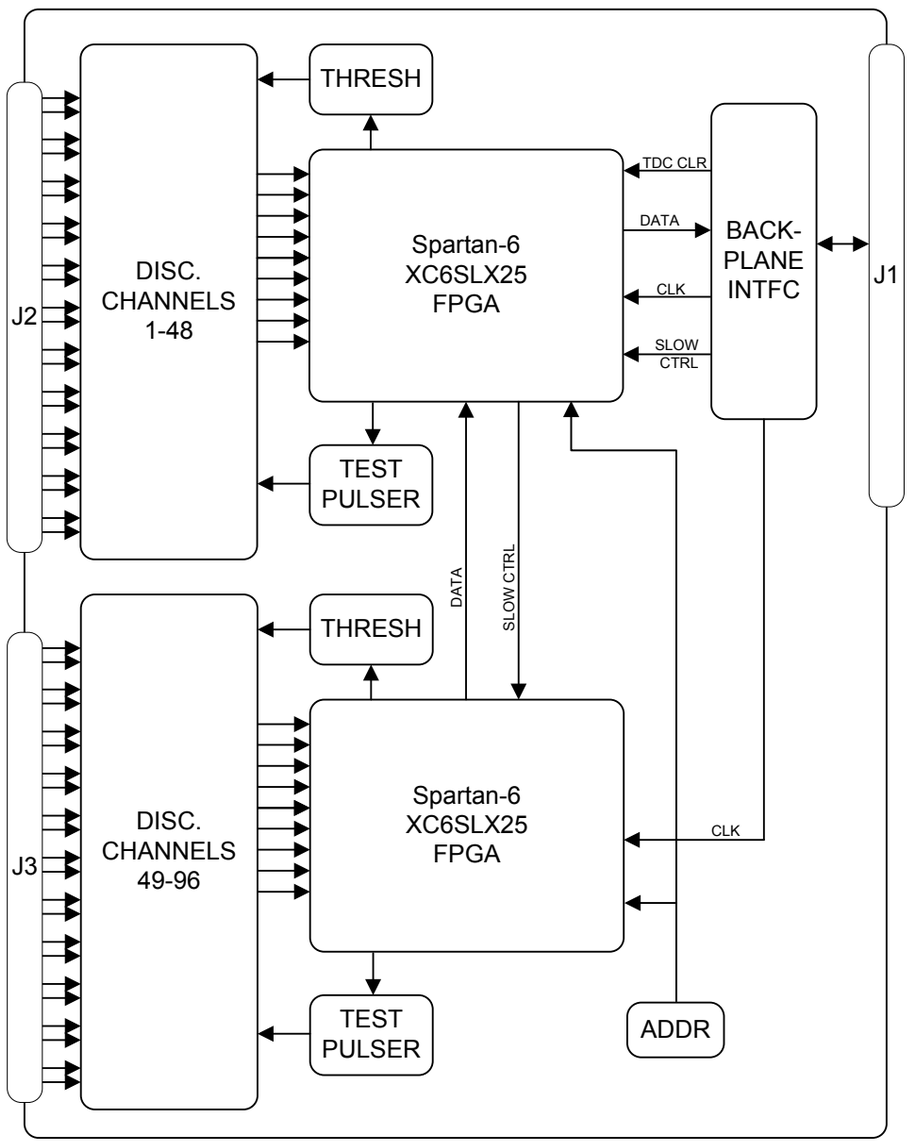

- Contains 96 High performance differential line receivers and discriminator channels.
- Channels 1-48 will connect to negative RPC pulses and channels 49-96 connect to positive RPC pulses.
- Discriminator threshold controlled by DAC.
- Analog test pulser to provide independent built in test of each channel.

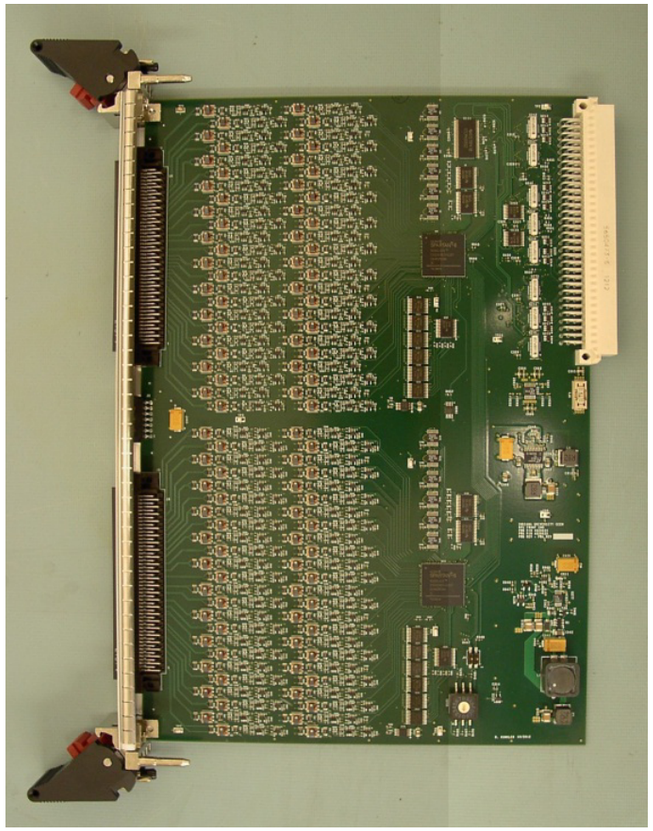

Production
6U board

Concentrator Board collects FEE hits

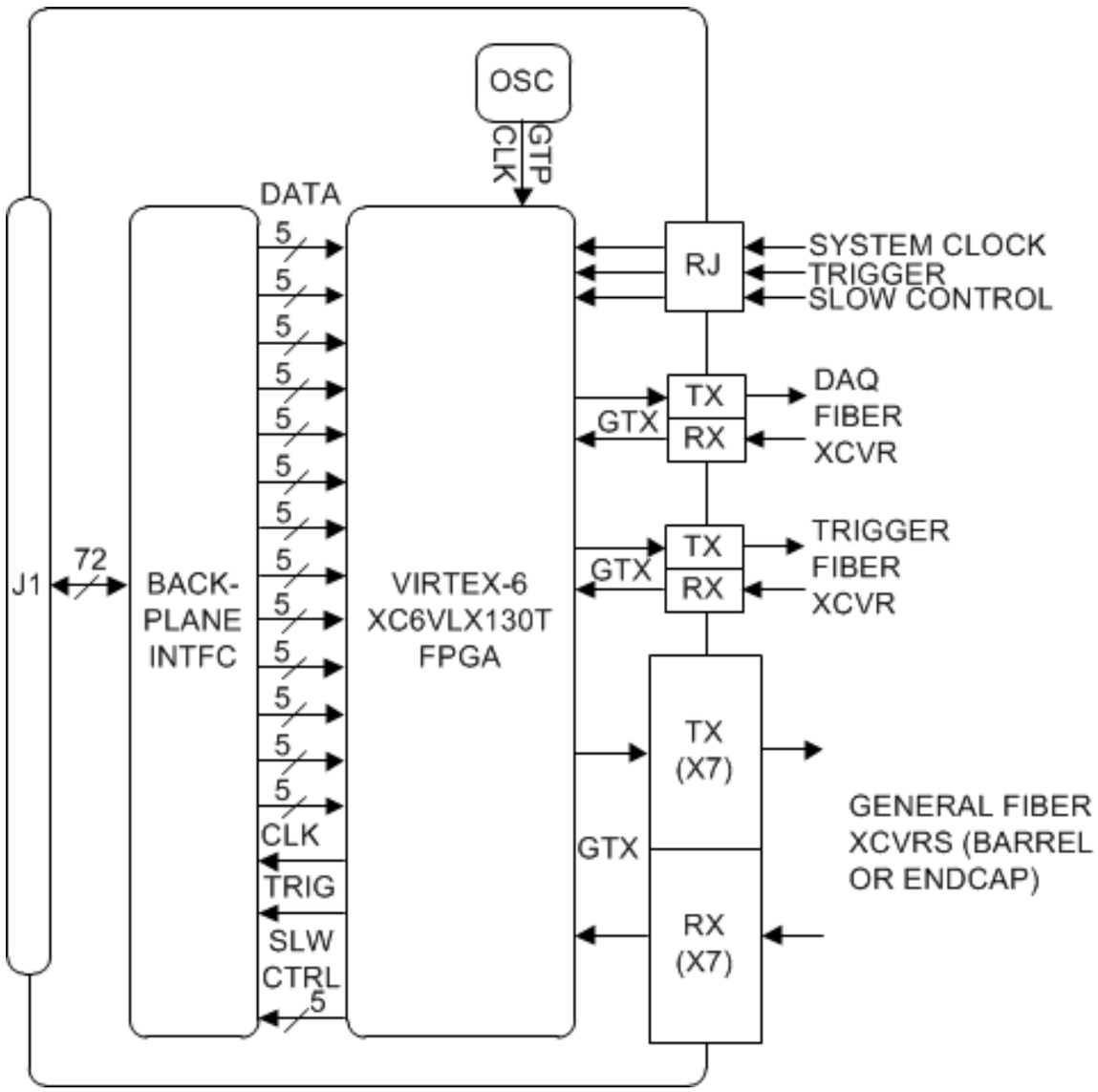

**eKLM Concentrator Notes:*

- *Will use different firmware, with bKLM reuse where possible.*
- *Same board assembly deployed for barrel and end-cap.*
- *In end-cap B2link remains, but is only used for slow control.*

- One timing and trigger distribution (TTD) interface.
- Two transceivers for “standard” Belle-II links (B2Link and GDL)
- Fourteen transceivers used for data fiber link input from scintillator layers – 2 barrel or 14 endcap.
- Uses ganged/stacked SFP cages for scintillator fibers – will require extra attention to signal integrity issues.
- One FPGA:
  - Implements 16 serial interfaces
  - Finds coincident hits in orthogonal strips and forwards to trigger system
  - Buffers data for >5.2 μs
  - Forwards events in triggered time windows to DAQ system

KLM readout crates & cables

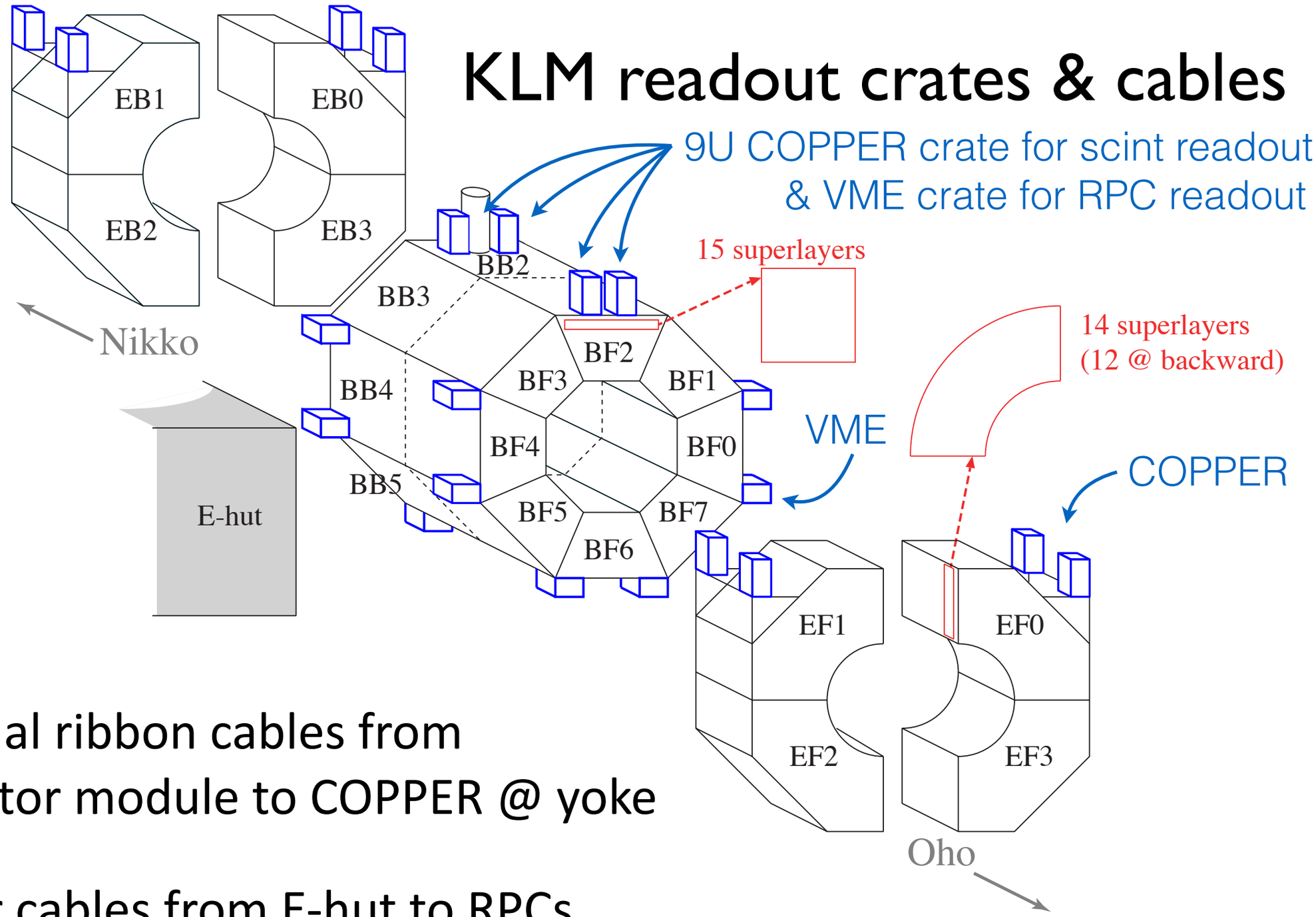

- ✓ Power/signal ribbon cables from scint-detector module to COPPER @ yoke
- ✓ RPC power cables from E-hut to RPCs
- ✓ MPPC power cables from E-hut to COPPER @ yoke
- ✓ Signal/trigger fiber trunks between E-hut and COPPER+VME @ yoke

KLM Readout: component counts

- Scintillators

  20k channels

  1250 16-channel waveform sampling ASICs

  128 boards

- Legacy RPCs

  20k channels

  Discriminator + FPGA-based TDC

  208 boards

- Data concentrators

  16 boards for barrel +
  16 boards for endcaps

32 DAQ and 32 Trigger fibers
(up to ~30 m to E-hut)

16 FINESSE
4 COPPER

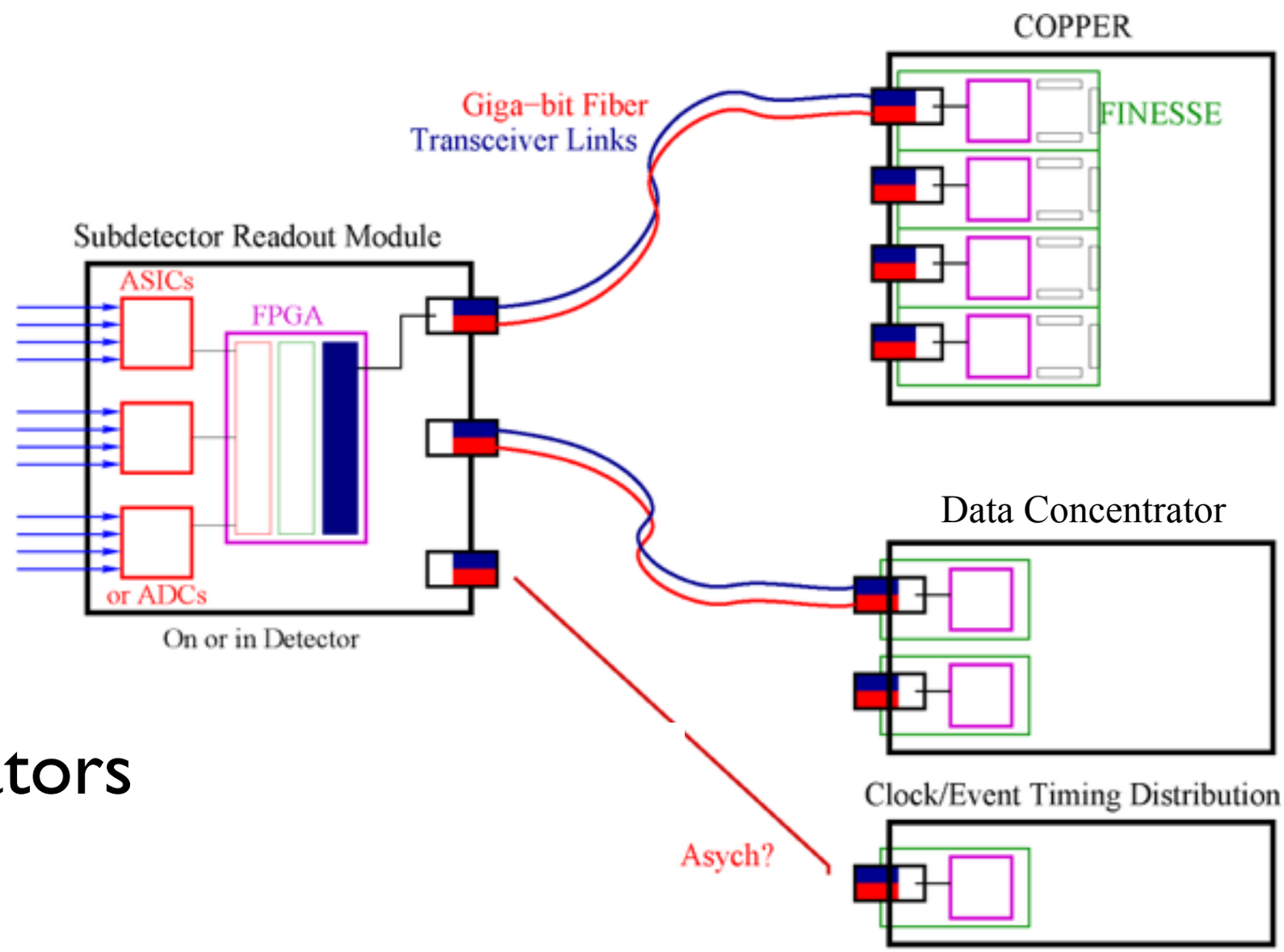

Due to data sparseness in KLM, concentrate to fewer fiber links

KLM Readout Overview

- 13 RPC Front-End boards connect to a Data Concentrator in the barrel
- 2 Scintillator Motherboards connect to a Data Concentrator in the barrel
- 7 Scintillator Motherboards connect to a Data Concentrator in the end-cap

- The Data Concentrator connects to the detector interface (HSLB, UT3, FTSW)
- Indiana University designed the RPC Front-End and Data Concentrator
- University of Hawaii designed the scintillator Motherboard.

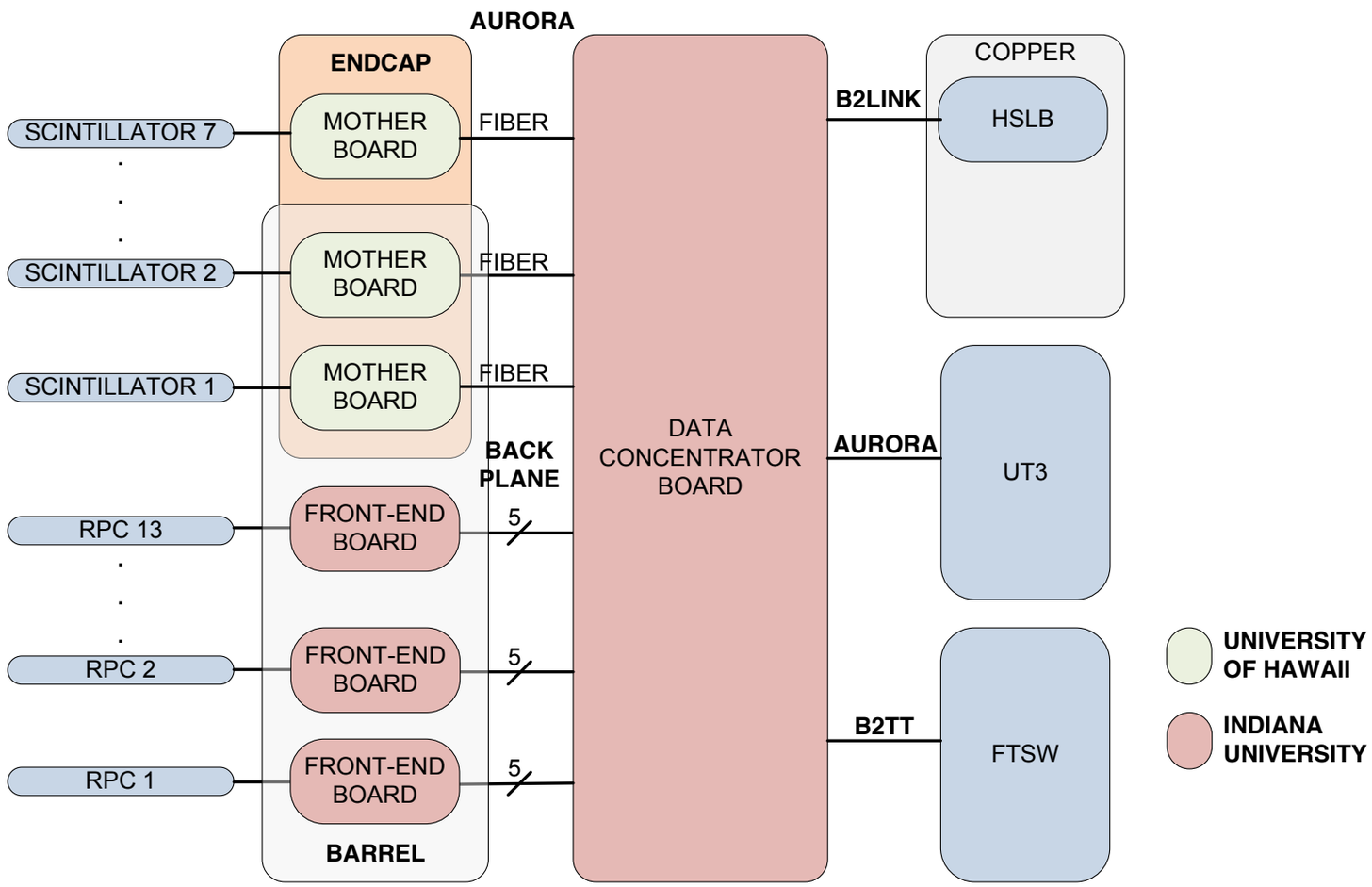

Belle II's Universal Trigger Board is used for KLM Trigger

- ✓FPGA = Virtex6 HXT
- ✓Input/Output:
  - Clock: 1 in, 3 out
  - NIM: 10 in, 10 out
  - 24 GTH (11 Gbps x 24)
  - 40 GTX (6.25 Gbps x 40)
  - LVDS: 32x2 in/out
  - RJ45: 4 (for Belle2Link)

Algorithm finds 2D track(s) in each projection

UT3 Trigger

For barrel:

Decoder
- Deserialize hits
- Send hits in coincidence window to Finders

r–ϕ Finder
- Assemble list(s) of r-ϕ view hits in each quadrant
- Geometry table

r–ϕ Fitter
- Fit (r, ϕ) hits in each list to get r_0 at I.P.
- straight-line fit

Decision
- Fire trigger if (r_0, z_0) is near I.P.
- range-dependent criterion

r–z Finder
- Assemble list(s) of r-z view hits in each quadrant
- Geometry table

r–z Fitter
- Fit (r, z) hits in each list to get z_0 at I.P.
- straight-line fit

Similar algorithm for endcaps

Questions, questions, questions …

42. What mad skillz would you need to implement this algorithm in the online DAQ system? in the offline software suite? *(on slide #58)*

KLM Performance for Muon Identification

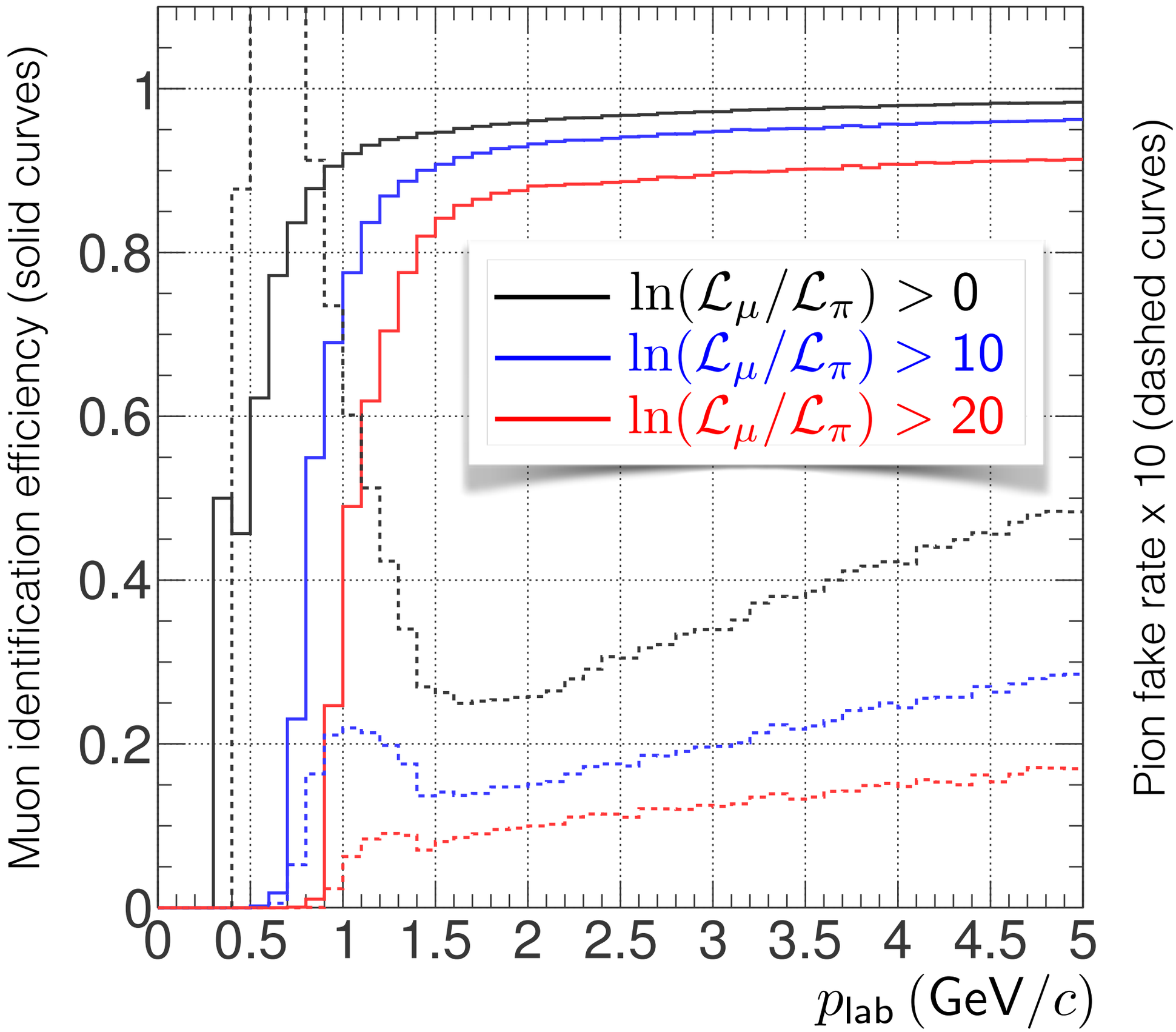

Questions, questions, questions …

43. Why does the pion fake rate rise with momentum above ~2 GeV/c? *(on slide #61)*

44. How is muon vs hadron identification done? *(see the B2TIP report!)*

Muon Identification Inefficiency

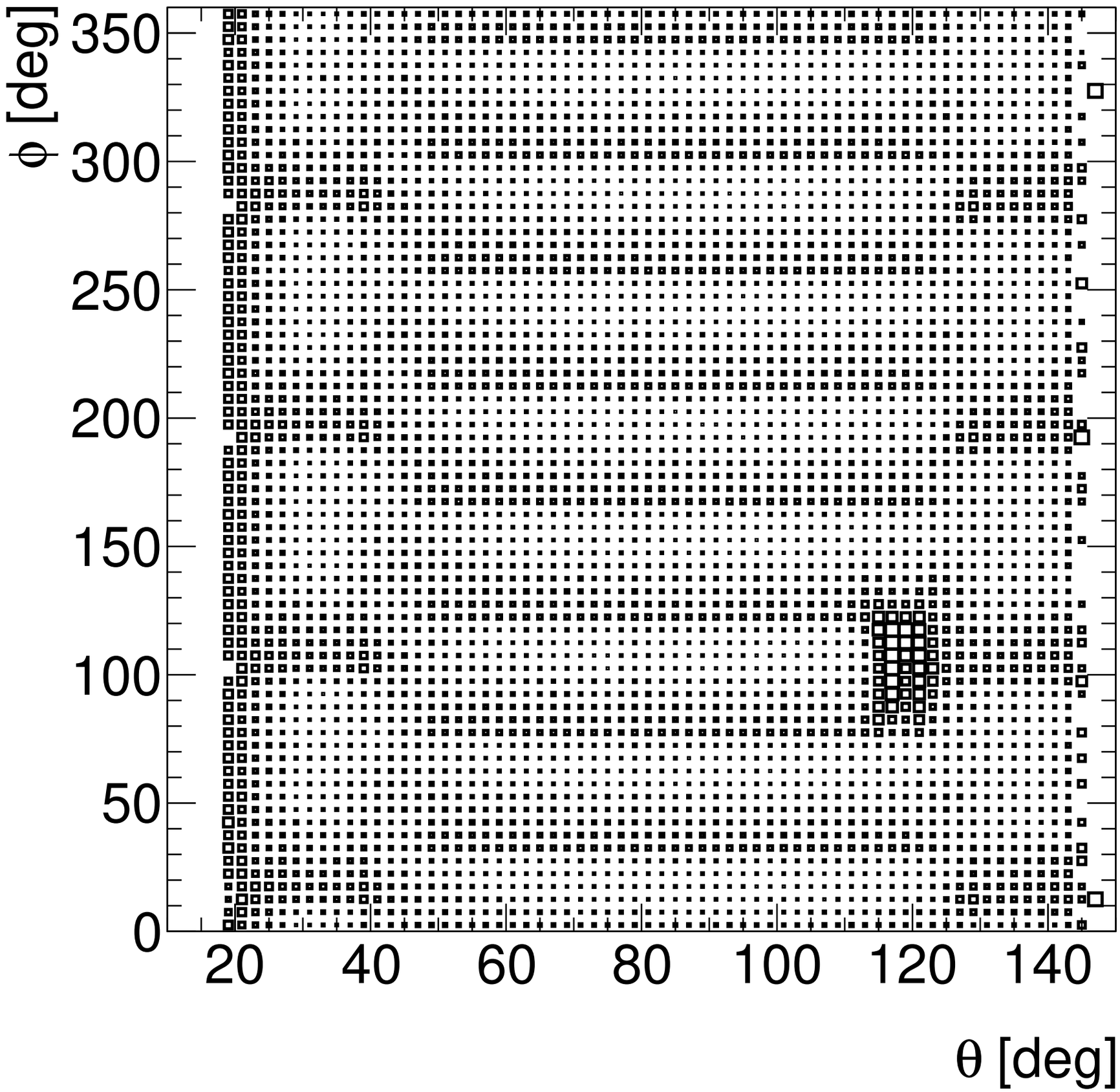

Questions, questions, questions …

45. Why is the muon-identification <u>in</u>efficiency not uniform in this scatterplot? Explain each feature. *(on slide #62)*

Installing Barrel KLM Detector Module

Installing Barrel KLM Detector Module (2013)

Installing Endcap KLM Detector Module (2014)

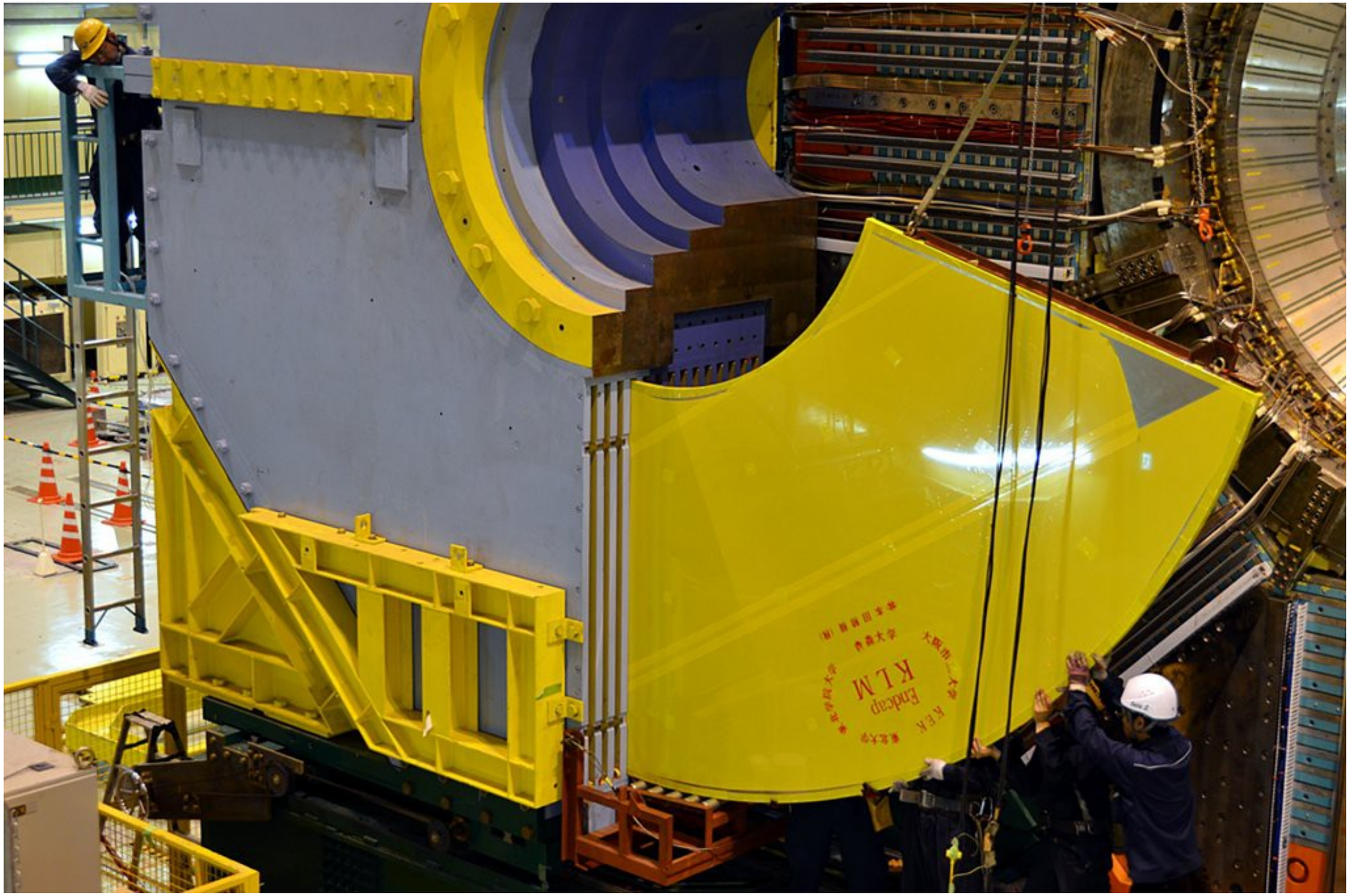

Installing Endcap KLM Detector Module

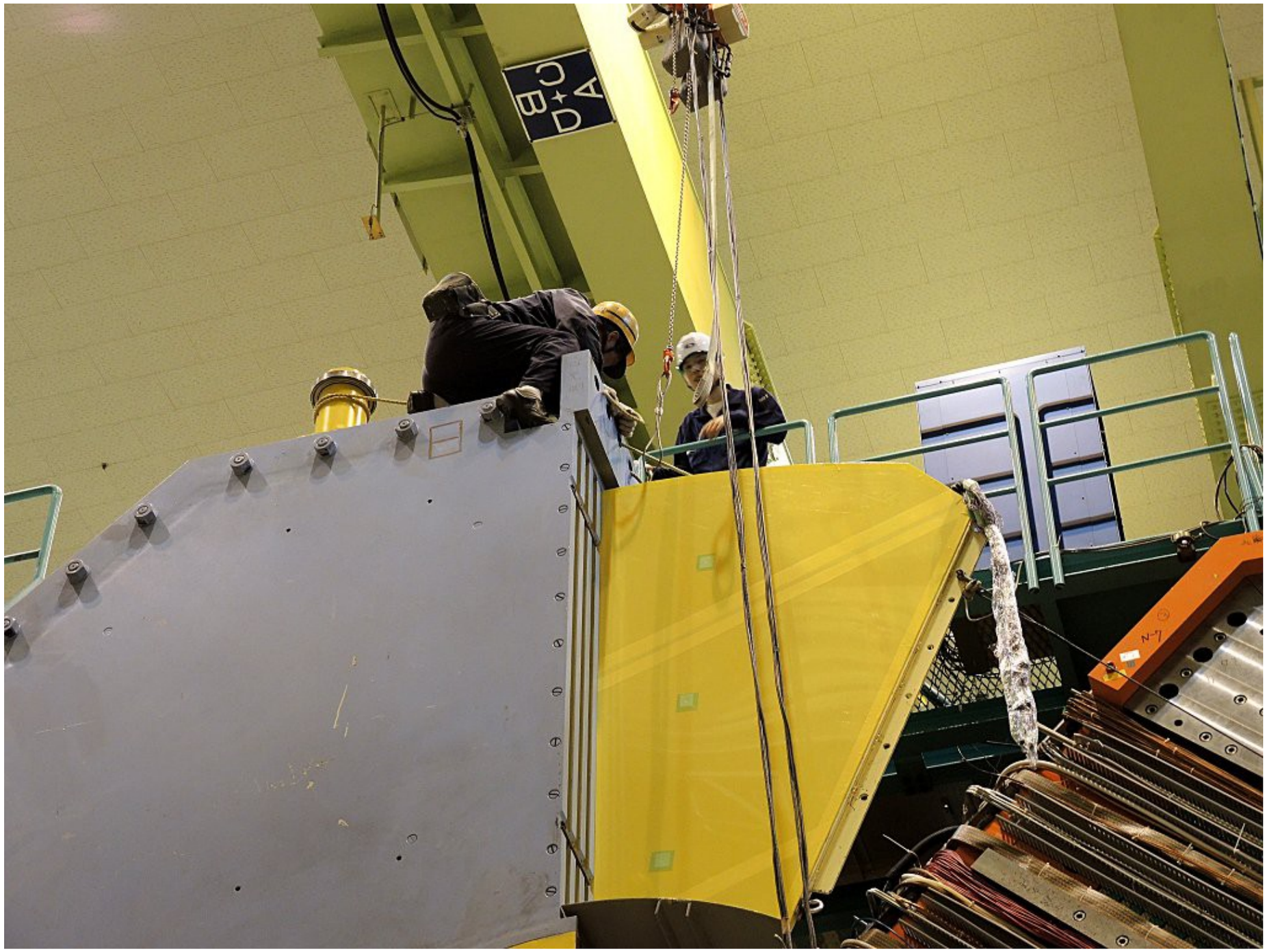

Summary

- ✓ Belle II's KLM (K_L–Muon detector) will continue to use the existing RPCs in the outer barrel and new scintillator panels in the inner barrel and endcaps.
- ✓ New detectors were installed in 2013–2014 (ITEP & Virginia Tech).
- ✓ New front-end readout electronics designed and in procurement (Hawaii & Indiana)
- ✓ Commissioning in progress with cosmic rays.