$\chi_{cJ} \to e^+e^-$

decay within the NRQCD effective theory framework

Nikolay Kivel

HELMHOLTZ
Institut Mainz

QWG 2016, June 6-10, PNNL, Richland, USA

Motivation and existing results

C-odd

$$Br[J/\Psi(1S) \to e^+e^-] = 5.971\%$$

$$Br[\Upsilon(1S) \to e^+e^-] = 2.38\%$$

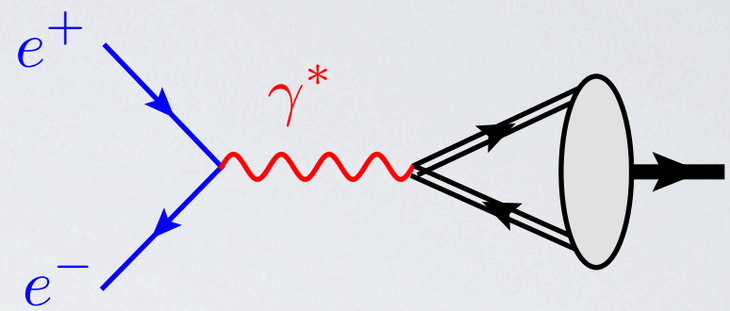

C-even

Kühn, Kaplan, Safiani 1979

generalized VDM model

$$\Gamma[\chi_{c1} \to e^+e^-] \simeq 0.46 \text{ eV}$$

$$\Gamma[\chi_{c2} \to e^+e^-] \simeq 0.014 \text{ eV}$$

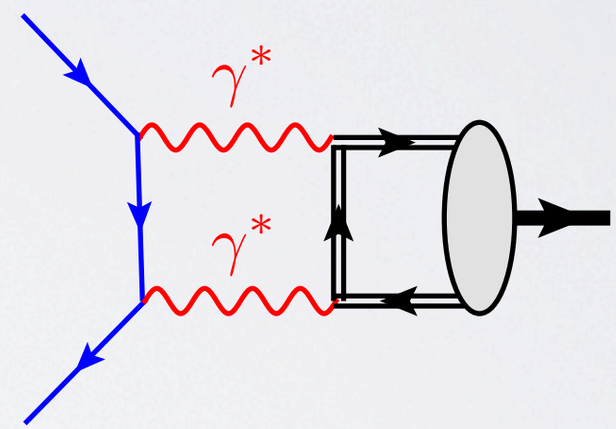

$\chi_{cJ}, X(3872)$

Denig, Guo, Hahnhart, Nefediev 2014

VDM model $\Gamma[\chi_{c1} \to e^+e^-] \simeq 0.1 \text{ eV}$

$\Gamma[X(3872) \to e^+e^-] \gtrsim 0.03 \text{ eV}$

might be detected
at high-luminosity
accelerator BES III

NRQCD factorisation framework

There are 3 well separated scales $mv^2 \ll mv \ll m$ $v^2 \ll 1$

integrate out hard modes Bodwin, Braaten,Lepage 1994

QCD → NRQCD

QED → NRQED

eff. Lagrangian + power counting

= systematic approach

essential regions of loop momentum Beneke, Smirnov 1997

hard	$k_0 \sim m$	$\vec{k} \sim m$
soft	$k_0 \sim mv$	$\vec{k} \sim mv$
potential	$k_0 \sim mv^2$	$\vec{k} \sim mv$
ultrasoft	$k_0 \sim mv^2$	$\vec{k} \sim mv^2$

NRQCD factorisation framework

If the soft scale is quite large $mv \gg \Lambda_{QCD}$ one can integrate over soft modes and potential gluons

NRQCD → pNRQCD
NRQED → pNRQED

This step can also be done systematically

Pineda, Soto 1998,
Brambilla, Pineda, Soto, Vairo 1999,2000

Decay amplitude within the NRQCD factorisation

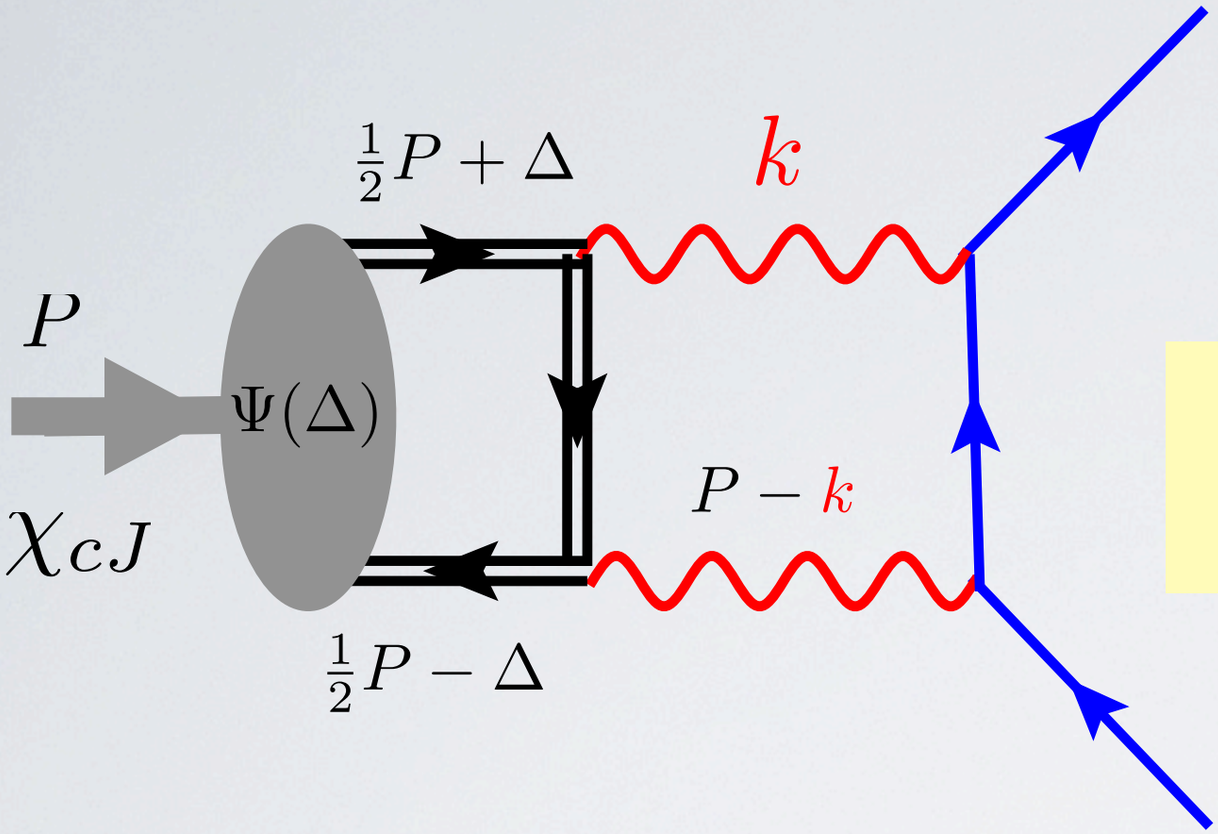

$$\vec{\Delta} \sim mv \qquad v^2 \ll 1$$

$$\mathcal{A} = \int d^3\Delta\, \Psi(\Delta)\, T[\,\bar{c}c(\Delta) \to e^+e^-]$$

expansion with respect to small v

Kühn, Kaplan, Safiani 1979

soft hard

$$\mathcal{A}_h = \int d^3\Delta\, \Psi(\Delta)\, T[\,\bar{c}c(\Delta) \to e^+e^-] \simeq \left[\int d^3\Delta\, \Psi(\Delta)\Delta\right] T'[\,\bar{c}c(0) \to e^+e^-]$$

$$\int d^3\Delta\, \Psi_J(\Delta)\Delta \sim \langle 0|\mathcal{O}(^3P_J)|\chi_{cJ}(P)\rangle \sim R'_{21}(0)$$

NRQCD factorisation: hard configuration

soft part is described within the NRQCD

HQET fields $\chi_\omega^\dagger \not{\omega} = -\chi_\omega^\dagger, \quad \not{\omega}\psi_\omega = \psi_\omega \qquad \omega_\alpha = (1, \vec{0}) \qquad \omega_\alpha \gamma_\perp^\alpha = 0$

$$\mathcal{O}(^3P_J) = \chi_\omega^\dagger \left(\frac{-i}{2}\right) \left\{ \underbrace{-\frac{1}{\sqrt{3}} \overleftrightarrow{D}_\perp^\alpha \gamma_\perp^\alpha}_{J=0}, \underbrace{\frac{1}{2\sqrt{2}} \overleftrightarrow{D}_\perp^\alpha \left[\gamma_\perp^\alpha, \gamma_\perp^\beta\right] \gamma_5}_{J=1}, \underbrace{\overleftrightarrow{D}_\perp^{(\alpha} \gamma_\perp^{\beta)}}_{J=2} \right\} \psi_\omega$$

power counting $\mathcal{O}(^3P_J) \sim v^4$

of the non-perturbative constants is reduced to one due to the heavy-quark spin symmetry

Bodwin, Braaten,Lepage 1994

$$\langle 0 | \mathcal{O}(^3P_0) | \chi_{c0} \rangle = i \langle \mathcal{O}(^3P_0) \rangle$$

$$\langle 0 | \mathcal{O}^\sigma(^3P_1) | \chi_{c1} \rangle = i\epsilon_\chi^\sigma \langle \mathcal{O}(^3P_0) \rangle$$

$$\langle 0 | \mathcal{O}^{\alpha\beta}(^3P_2) | \chi_{c2} \rangle = i\epsilon_\chi^{\alpha\beta} \langle \mathcal{O}(^3P_0) \rangle$$

$$\langle \mathcal{O}(^3P_0) \rangle = \sqrt{2N_c}\sqrt{2M_{\chi_{c0}}}\sqrt{\frac{3}{4\pi}} R'_{21}(0)$$

$R'_{21}(0)$ derivative of the radial w.f. at the origin

NRQCD factorisation: hard configuration

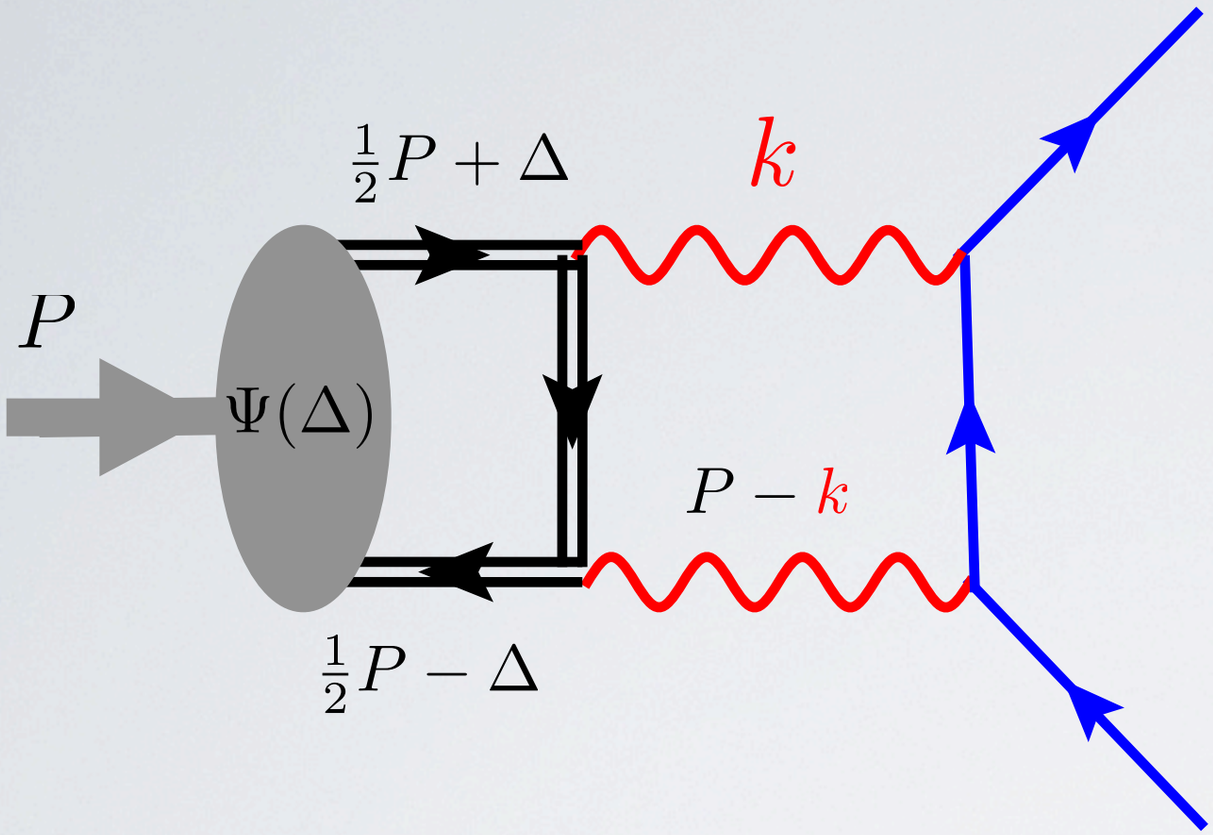

$$\mathcal{A} \simeq \left[\int d^3\Delta\, \Psi(\Delta)\Delta\right] T'[\,\bar{c}c(0) \to e^+e^-]$$

hard contributions are computed in pQCD

Kühn, Kaplan, Safiani 1979

$$T'_{J=0} = \mathcal{O}(m_l) \qquad T'_{J=1} \sim \frac{\alpha^2}{m_c^3} \ln \frac{m_c^2}{\vec{\Delta}^2} \qquad T'_{J=2} \sim \frac{\alpha^2}{m_c^3} \left\{ \ln \frac{m_c^2}{\vec{\Delta}^2} + \frac{1}{3}(\ln 2 - 1 + i\pi) \right\}$$

IR-sensitive !

☛ IR divergence indicates that correct factorisation formula includes one more term

NRQCD factorisation: ultrasoft configuration

additional contribution: k is ultrasoft $k_0 \sim mv^2$ $\vec{k} \sim mv^2$

$$\mathcal{A}^{us} = \left[\int d^3\Delta\, \Psi(\Delta)\, T_S[\bar{c}c(^3P_J) \to \gamma^*_{us}\, \bar{c}c(^3S_1)] \right]$$

pNQCD

$$\times H[\bar{c}c(^3S_1) \to e^+e^-] T_l[\gamma^*_{us}\, e^+ \to e^+]$$

pQCD soft-collinear QED

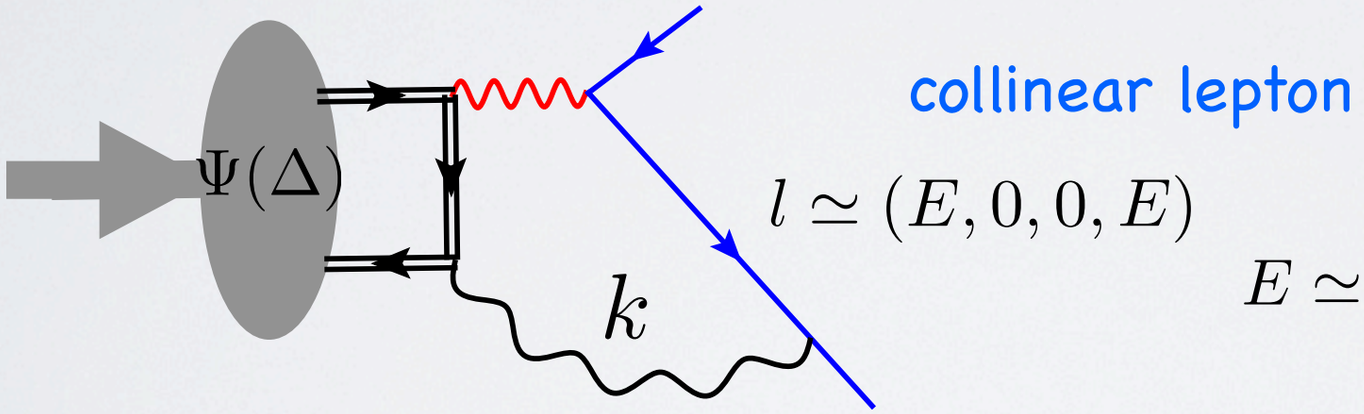

collinear lepton

$l \simeq (E, 0, 0, E)$

$E \simeq m$

NRQCD factorisation: ultrasoft configuration

$$H[\,\bar{c}c(^3S_1) \to e^+e^-]T_l[\gamma^*_{us}\, e^+ \to e^+]$$

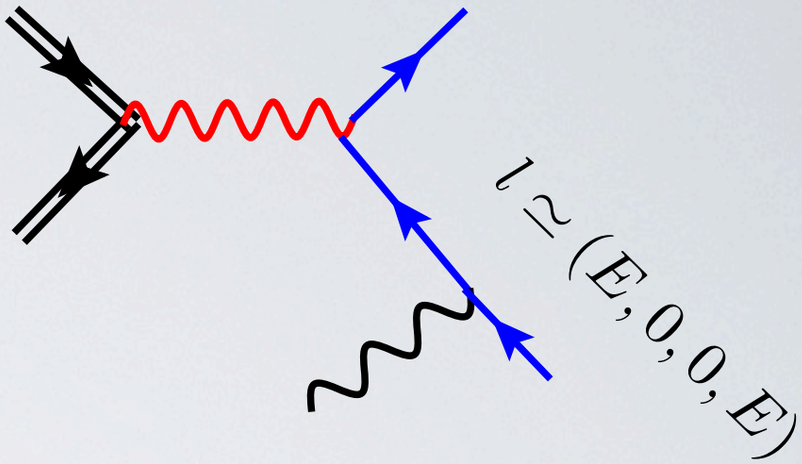

$$\simeq C_\gamma\, \bar{u}_n \gamma^\sigma_\perp v_{\bar{n}}\, \mathcal{O}^\sigma(^3S_1) Y_n^\dagger Y_{\bar{n}}$$

hard coefficient $C_\gamma = \dfrac{\alpha\pi}{m_c^2} e_c$ $\qquad \mathcal{O}^\sigma(^3S_1) = \chi^\dagger_\omega \gamma^\sigma_\top \psi_\omega$

soft-collinear QED

interaction of collinear leptons and soft photons = the soft Wilson lines

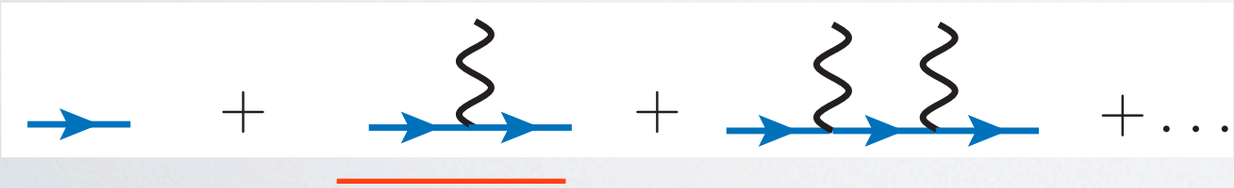

$$= \mathrm{P}\exp\left\{ie\int_0^\infty ds\, n\cdot B^{us}(sn)\right\} \equiv Y_n^\dagger(0)$$

NRQCD factorisation: ultrasoft configuration

additional contribution: k is ultrasoft $k_0 \sim mv^2 \quad \vec{k} \sim mv^2$

$$\mathcal{A}^{us} = \left[\int d^3\Delta\, \Psi(\Delta)\, T_S[\bar{c}c(^3P_J) \to \gamma^*_{us}\, \bar{c}c(^3S_1)] \right]$$

pNQCD

$$\times H[\bar{c}c(^3S_1) \to e^+e^-] T_l[\gamma^*_{us}\, e^+ \to e^+]$$

pQCD soft-collinear QED

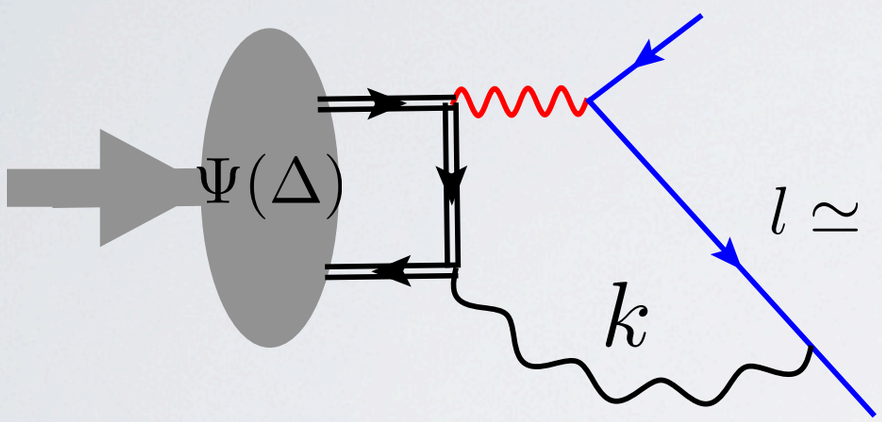

$l \simeq (E, 0, 0, E) \quad E \simeq m$

$$\mathcal{A}^{us} = C_\gamma\, \bar{u}_n \gamma^\sigma_\perp v_{\bar{n}} \;\; \langle 0|\, \mathcal{O}^\sigma(^3S_1) Y_n^\dagger Y_{\bar{n}}\, |\chi_{cJ}\rangle$$

$$\mathcal{O}^\sigma(^3S_1) = \chi^\dagger_\omega \gamma^\sigma_\top \psi_\omega$$

NRQCD factorisation: matching

$$\mathcal{A}_J = \bar{u}_n \Gamma_J v_{\bar{n}} \; C^{(J)}_{\gamma\gamma}(\mu_F) \; \langle 0|\mathcal{O}(^3P_J)|\chi_{cJ}\rangle$$

$$+ \bar{u}_n \gamma^\sigma v_{\bar{n}} \, C_\gamma \; \langle 0| \, \mathcal{O}^\sigma(^3S_1) Y_n^\dagger Y_{\bar{n}} \, |\chi_{cJ}\rangle \, (\mu_F)$$

$$\mathcal{L}_0^{em}[B^{us}] = \int d^4x \; \psi_\omega^\dagger(x)\gamma_0 \left(i\omega\cdot\partial + \frac{i\partial_\top \cdot i\partial_\top}{2m} \right) \psi_\omega(x) \quad \sim v^0$$

$$\mathcal{L}_1^{em} = e e_Q \int d^4x \; \psi_\omega^\dagger(x)\gamma_0 \left[\vec{x}\cdot\partial_\top \omega \cdot B^{us}(x_0) + \frac{1}{m} B^{us}(x_0)\cdot i\partial_\top \right] \psi_\omega(x) \quad \sim v$$

$$T\{\mathcal{O}^\sigma_\gamma(^3S_1), \mathcal{L}_1^{em}[B^{us}]\} \sim m v^4$$

$$\mathcal{O}^\sigma(^3S_1) = \chi_\omega^\dagger \gamma_\top^\sigma \psi_\omega \; \sim v^3$$

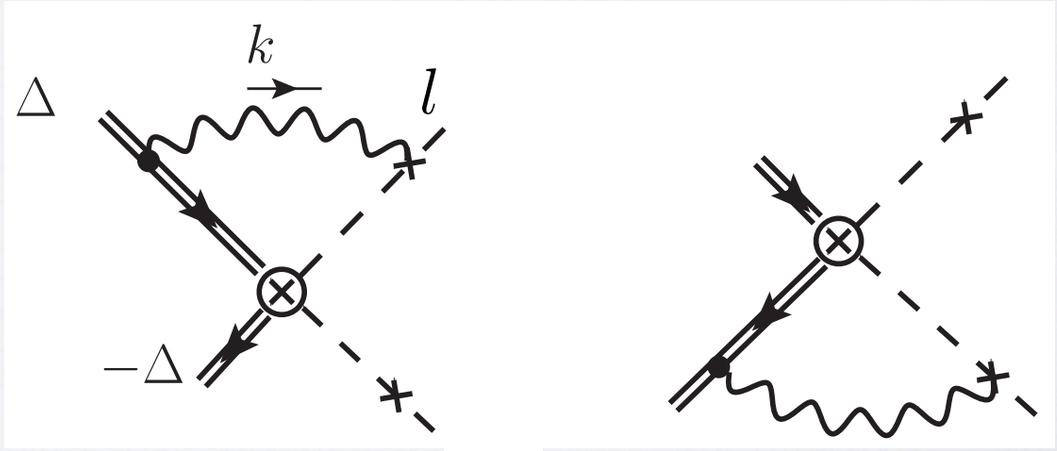

Complete NRQCD factorisation

NK, Vanderhaeghen 2015

$$\mathcal{A}_J = \bar{u}_n \Gamma_J v_{\bar{n}} \; C^{(J)}_{\gamma\gamma}(\mu_F) \; \langle 0|\mathcal{O}(^3P_J)|\chi_{cJ}\rangle$$

$$+ \bar{u}_n \gamma^\sigma v_{\bar{n}} \, C_\gamma \; \langle 0| \, \mathcal{O}^\sigma(^3S_1) Y_n^\dagger Y_{\bar{n}} \, |\chi_{cJ}\rangle \, (\mu_F)$$

$$C^{(J=1)}_{\gamma\gamma}(\mu_F) = \frac{\alpha^2}{m_c^3} e_c^2 \, \sqrt{2} \ln \frac{m_c^2}{4\mu_F^2}$$

$$\mu_F \simeq 300 - 500\text{MeV}$$

$$C^{(2)}_{\gamma\gamma}(\mu_F) = \frac{\alpha^2}{m_c^3} e_c^2 \left\{ \ln \frac{\mu_F^2}{m_c^2} + \frac{2}{3} \left(\ln 2 - 1 + i\pi \right) \right\}$$

$$C_\gamma = \frac{\alpha\pi}{m_c^2} e_c$$

?

$$\langle 0|\mathcal{O}(^3P_J)|\chi_{cJ}\rangle \sim R'_{21}(0)$$

$$\langle 0| \, \mathcal{O}^\sigma(^3S_1) Y_n^\dagger Y_{\bar{n}} \, |\chi_{cJ}\rangle \, (\mu_F)$$

Low energy effective theory for $\langle 0| \mathcal{O}^\sigma(^3S_1) Y_n^\dagger Y_{\bar{n}} |\chi_{cJ}\rangle$

low energy effective theory

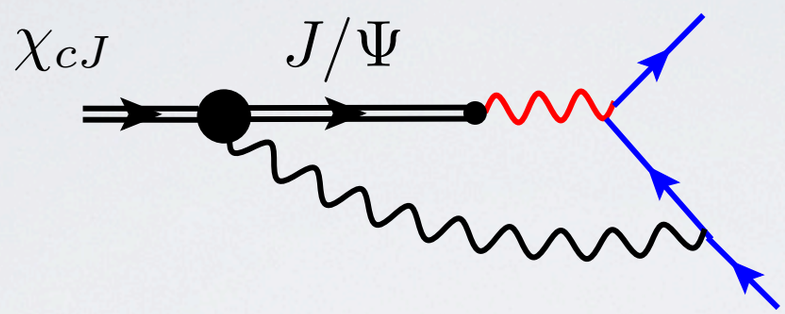

soft photon cannot resolve the quark degrees of freedom

NRQCD → low energy effective theory

degrees of freedom: soft photons & mesons: $J/\Psi, \chi_{cJ}, \pi, \ldots$

$\mathcal{L}_{eff}$ includes exact and approximates symmetries of NRQCD in a systematic way using 1/m expansion

Effective Lagrangian

Casalbuoni et al, 1993

$$\mathcal{L}_{int}^{eff} = ee_Q\, f_\gamma \left\{ \chi_2^{ij}\, \vec{\psi}_j\, \vec{E}_i + \sqrt{2}\, \vec{\chi}_1 \cdot (\vec{\psi} \times \vec{E}) + \frac{1}{\sqrt{3}} \chi_0\, \vec{\psi} \cdot \vec{E} \right\} + (\psi \to \psi', f_\gamma \to f'_\gamma) + \ldots$$

$\chi_{cJ} \to J/\psi + \gamma$

$$|f_\gamma| = \left\{ \begin{array}{l} (\chi_{c0})\, 5.87 \\ (\chi_{c1})\, 6.05 \\ (\chi_{c2})\, 6.03 \end{array} \right\} \simeq 6.0$$

$\psi' \to \chi_{cJ} + \gamma$

$$|f'_\gamma| = \left\{ \begin{array}{l} 6.5\, (\chi_{c0}\gamma) \\ 7.0\, (\chi_{c1}\gamma) \\ 8.1\, (\chi_{c2}\gamma) \end{array} \right\} \simeq 7.2$$

$$f_\gamma = \sqrt{2M_\chi}\sqrt{2M_\psi}\frac{1}{\sqrt{3}}\int_0^\infty dr r^3 R_{21}(r) R_{10}(r)$$

Eichten et al, 1978, 2004

$f_\gamma > 0 \qquad f'_\gamma < 0$

$M_\chi \to \infty$

$$\mathcal{L}_{\rm kin}(x) = \frac{1}{2} 2M_\chi\, \psi_\mu^{(\omega)}(x) \left\{ i(\omega\partial) - \Delta \right\} \psi_\mu^{(\omega)}(x) + \ldots$$

$$\Delta = (M_\chi^2 - M_{J/\Psi}^2)/2M_\chi$$

$$\omega^\mu \psi_\mu^{(\omega)}(x) = 0$$

Low energy effective theory

operator matching

$$\mathcal{O}_\sigma(^3S_1) = \langle \mathcal{O}(^3S_1)\rangle\, \psi_\sigma^{(\omega)} + \langle \mathcal{O}'(^3S_1)\rangle\, \psi_\sigma'^{(\omega)}$$

$$\mathcal{O}(^3P_J) = i\,\langle \mathcal{O}(^3P_0)\rangle\, \chi_J$$

$$\langle 0|\, \psi_\omega^\dagger \gamma_\perp^\sigma \chi_\omega\, |J/\psi\rangle = \epsilon_\psi^\sigma\ \langle \mathcal{O}(^3S_1)\rangle$$

$$\langle 0|\, \mathcal{O}^\sigma(^3P_1)\, |\chi_{c1}\rangle = i\epsilon_\chi^\sigma\ \langle \mathcal{O}(^3P_0)\rangle$$

where

$$\langle \mathcal{O}(^3S_1)\rangle = \sqrt{2N_c}\sqrt{2M_\psi}\sqrt{\frac{1}{4\pi}}\ R_{10}(0)$$

$$\langle \mathcal{O}'(^3S_1)\rangle = \sqrt{2N_c}\sqrt{2M_\psi}\sqrt{\frac{1}{4\pi}}\ R_{20}(0)$$

$$\langle \mathcal{O}(^3P_0)\rangle = \sqrt{2N_c}\sqrt{2M_{\chi_{c0}}}\sqrt{\frac{3}{4\pi}}R'_{21}(0)$$

$$\Rightarrow \quad \mathcal{O}_\sigma(^3S_1) Y_n^\dagger Y_{\bar{n}} \simeq \left(\langle \mathcal{O}(^3S_1)\rangle\, \psi_\sigma^{(\omega)} + \langle \mathcal{O}'(^3S_1)\rangle\, \psi_\sigma'^{(\omega)}\right) Y_n^\dagger Y_{\bar{n}}$$

Low energy effective theory

$$\langle 0|\, \mathcal{O}_\sigma(^3S_1) Y_n^\dagger Y_{\bar{n}}\, |\chi_{cJ}\rangle$$

$$\langle 0|\, T\left\{ \left(\left\langle \mathcal{O}(^3S_1)\right\rangle \psi_\sigma^{(\omega)}(0) + \left\langle \mathcal{O}'(^3S_1)\right\rangle \psi_\sigma^{\prime(\omega)}(0) \right) Y_n^\dagger Y_{\bar{n}}, \mathcal{L}_{int}^{eff} \right\} |\chi_{cJ}\rangle$$

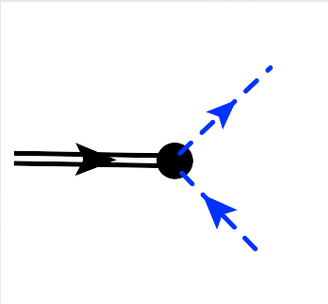

contact term

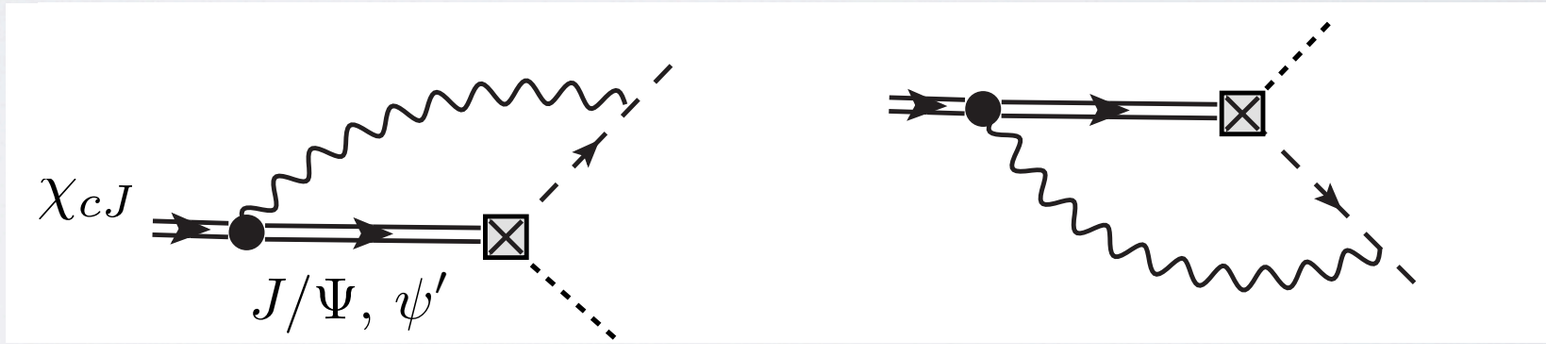

$$\langle 0|\, \mathcal{O}_\sigma(^3S_1) Y_n^\dagger Y_{\bar{n}}\, |\chi_{cJ}\rangle \sim \frac{\alpha}{\pi} f_\gamma R_{10}(0) \frac{\Delta}{M_\chi} (\ln 2 - 1 - \ln[\mu_\chi/\Delta] - i\pi)$$

!

we set $\mu_\chi = \mu_F \simeq 300 - 500\text{MeV}$

$$\Delta = (M_\chi^2 - M_{J/\Psi}^2)/2M_\chi$$

Effective Lagrangian

Soft photon sector

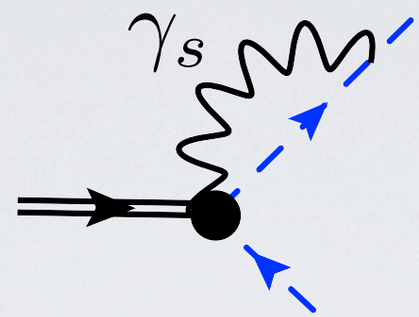

this term can be associated with

$$|\bar{Q}Q\gamma\rangle$$

corresponding eff. coupling $f_{\gamma\gamma}$

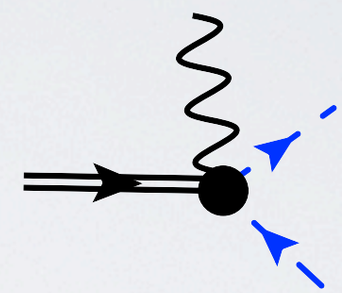

$$\chi_{cJ} \to l^+ l^- + \gamma_s$$

$$E_\gamma \sim \Lambda$$

UV divergent, scaleless and can be understood as the QED renormalization of the contact term in effective theory

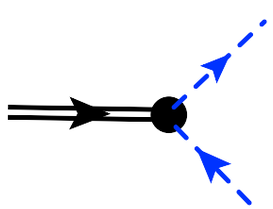

$$\sim C_{\gamma\gamma}^{(J)}(\mu_0)\,\langle \mathcal{O}(^3P_0)\rangle + C_\gamma f_{\gamma\gamma}$$

contact term

in the following we assume that $f_{\gamma\gamma}$ is small

$$C_{\gamma\gamma}^{(J)}(\mu_0)\,\langle \mathcal{O}(^3P_0)\rangle \gg C_\gamma f_{\gamma\gamma}$$

The results for widths

$$\Gamma[\chi_{c1} \to e^+e^-] = \frac{1}{12\pi} M_\chi \, |C^{(1)}_{\gamma\gamma}(\mu_0) \langle \mathcal{O}(^3P_0) \rangle + C_\gamma \frac{\alpha}{\pi} e_c \mathcal{S}(\mu_0)/\sqrt{2} \, |^2$$

$$\Gamma[\chi_{c2} \to e^+e^-] = \frac{1}{40\pi} M_\chi \, |C^{(2)}_{\gamma\gamma}(\mu_0) \langle \mathcal{O}(^3P_0) \rangle + C_\gamma \frac{\alpha}{\pi} e_c \mathcal{S}(\mu_0) \, |^2$$

$$\mathcal{S} = f_\gamma \langle \mathcal{O}(^3S_1) \rangle \frac{\Delta}{M_\chi} \left(\ln 2 - 1 - \ln \frac{\mu_0}{\Delta} - i\pi \right) + f'_\gamma \langle \mathcal{O}'(^3S_1) \rangle \frac{\Delta'}{M_\chi} \left(\ln 2 - 1 - \ln \frac{\mu_\chi}{|\Delta'|} \right)$$

matching scale $\mu_0 \simeq 300 - 500 MeV$

Eichten, Quigg 1995

Buchmüller-Tye potential

$$\langle \mathcal{O}(^3P_0) \rangle = \sqrt{2N_c}\sqrt{2M_{\chi_{c0}}}\sqrt{\frac{3}{4\pi}} R'_{21}(0)$$

$$\langle \mathcal{O}(^3S_1) \rangle = \sqrt{2N_c}\sqrt{2M_\psi}\sqrt{\frac{1}{4\pi}} \, R_{10}(0)$$

$$\langle \mathcal{O}'(^3S_1) \rangle = \sqrt{2N_c}\sqrt{2M_\psi}\sqrt{\frac{1}{4\pi}} \, R_{20}(0)$$

$$|R'_{21}(0)|^2 \simeq 0.075 \mathrm{GeV}^5$$

$$|R_{10}(0)|^2 \simeq 0.81 \mathrm{GeV}^3$$

$$|R_{20}(0)|^2 \simeq 0.53 \mathrm{GeV}^3$$

Numerical estimates

m_c=1.5GeV

NK, Vanderhaeghen 2015

μ_0, MeV	$\Gamma[\chi_{c1} \to e^- e^+]$, eV	$\Gamma[\chi_{c2} \to e^- e^+]$, eV
300	$0.060_s + 0.009_{hs} + 0.023_h = 0.091$	$0.036_s + 0.020_{hs} + 0.016_h = 0.072$
400	$0.063_s + 0.013_{hs} + 0.011_h = 0.087$	$0.038_s + 0.017_{hs} + 0.013_h = 0.068$
500	$0.066_s + 0.011_{hs} + 0.004_h = 0.082$	$0.040_s + 0.015_{hs} + 0.010_h = 0.065$

Comparison with other estimates:

Kühn, Kaplan, Safiani 1979 generalized VDM model $\Gamma[\chi_{c1} \to e^+ e^-] \simeq 0.46$ eV, $\Gamma[\chi_{c2} \to e^+ e^-] \simeq 0.014$ eV

Denig, Guo, Hahnhart, Nefediev 2014 VDM model $\Gamma[\chi_{c1} \to e^+ e^-] \simeq 0.1$ eV

Czyz, Kühn, Tracz , 2016 phenom. model (VDM?) $\Gamma[\chi_{c1} \to e^+ e^-] \simeq 0.078$ eV, $\Gamma[\chi_{c2} \to e^+ e^-] \simeq 1.35$ eV

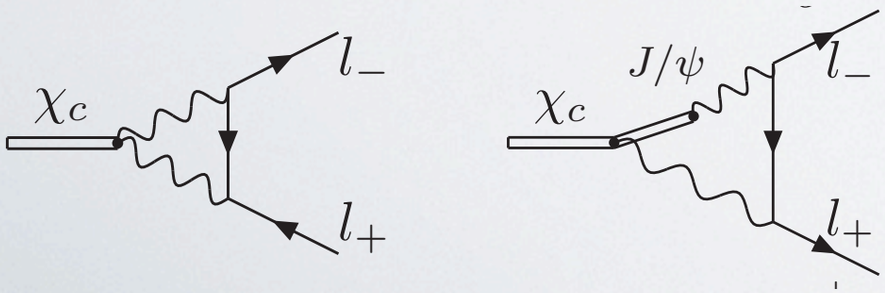

	$\gamma\gamma + J/\psi\gamma$	$\gamma\gamma$	$J/\psi\gamma$	QED+Z^0
$\Gamma(\chi_{c_1} \to e^+e^-)$ [eV]	0.078	0.073	0.003	0.071
$\Gamma(\chi_{c_2} \to e^+e^-)$ [eV]	1.35	0.032	0.975	-

Summary

- The decay rate $\Gamma[\chi_{cJ} \to e^+e^-]$ is computed using effective filed theory framework
- There are two different contributions: hard (both photons are hard) and ultrasoft (one photon is ultrasoft) which can be described unambiguiosly
- Ultrasoft contribution can be computed within the low energy effective theory framework (em sector of HH χ PT)
- Nonperturbative contributions are presented in terms of matrix elements in NRQCD. All these matrix elements are known and related to the radial wave functions at zero.
- Higher order corrections in hard term are of order v^2 and can not be very large numerically (expectation)

Thank you!

Suppressed decays $\eta_c \to l^+ l^-$ & $\chi_{c0} \to e^+ e^-$

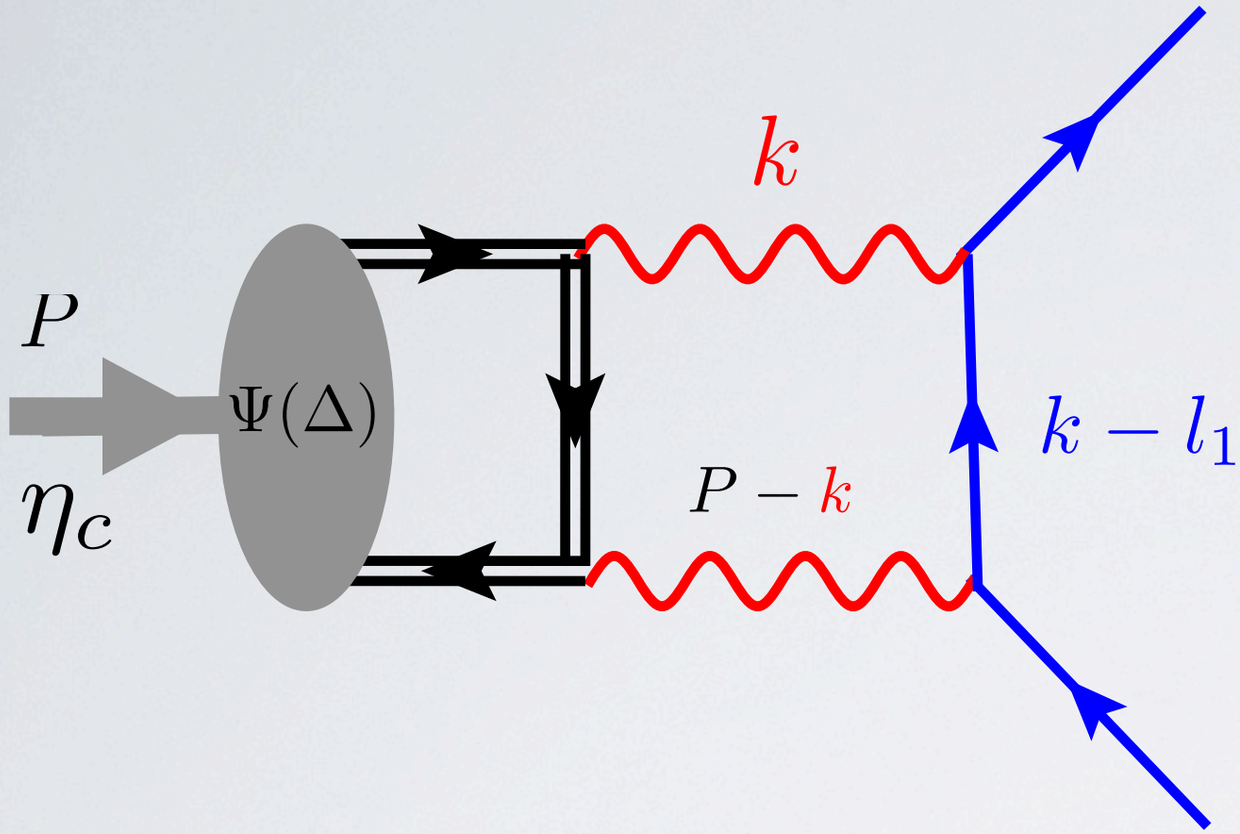

dominant regions

hard $k_0 \sim m$ $\vec{k} \sim m$

collinear $k \sim l_1$ or l_2

ultrasoft $k - l_1 \sim mv^2$

NK, Kupsc 2016

soft hard

$$\mathcal{A}[\eta_c \to l\bar{l}] \sim R_{10}(0)\, \alpha^2 \frac{m_l}{M_\eta} \frac{1}{m_c^2} \left(\frac{1}{4} \ln^2 \lambda - \ln \lambda + 4 \ln 2 + \frac{\pi^2}{12} + i\pi \frac{1}{2} \ln \lambda \right)$$

$\lambda = m_l^2 / 4 m_c^2$ $\alpha \ln 1/\lambda = 0.127$

$$\frac{Br\left[\eta_c \to e^+ e^-\right]}{Br\left[\eta_c \to \gamma\gamma\right]} = 1.6 \times 10^{-9} \qquad Br\left[\eta_c \to e^+ e^-\right] = 2.5 \times 10^{-13}$$

Suppressed decays $\eta_c \to l^+ l^-$ & $\chi_{c0} \to e^+ e^-$

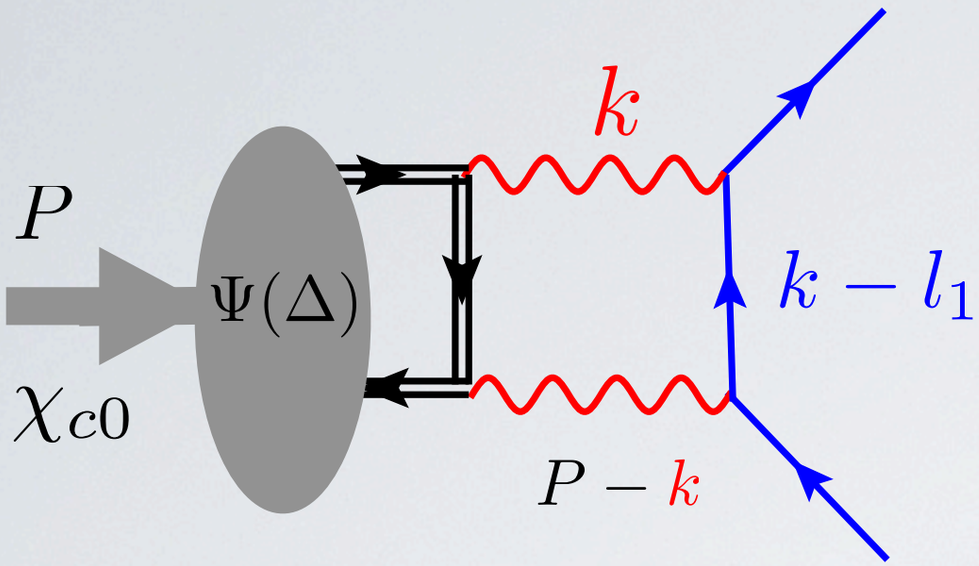

dominant regions

hard $k_0 \sim m$ $\vec{k} \sim m$

collinear $k \sim l_1$ or l_2

1st ultrasoft $k - l_1 \sim m_l$

2nd ultrasoft $k \sim m v^2$

NK, Kupsc 2016

$$A_{\chi_0 \to ll} \sim \frac{m_l}{m_c} \left\{ C^{(0)}_{\gamma\gamma}(\mu_F) \langle \mathcal{O}(^3P_0) \rangle - \frac{\alpha}{\pi} e_c C_\gamma \frac{1}{\sqrt{3}} \mathcal{S}(\mu_F) \right\}$$

$$\lambda = m_l^2 / 4 m_c^2$$

$$C^{(0)}_{\gamma\gamma}(\mu_F) = \frac{\alpha^2}{\sqrt{3}} \frac{e_c^2}{m_c^3} \left\{ 2 \ln \frac{m_c^2}{\mu_F^2} + \frac{3}{4} \ln^2 \lambda + \ln \lambda + \frac{\pi^2}{4} + 2 + 6 \ln 2 + i\pi \left(2 \ln 2 - 1 + \frac{3}{2} \ln \lambda \right) \right\}$$

$$Br[\chi_{c0} \to e^- e^+] = 1.0 \times 10^{-12} \qquad Br[\chi_{c0} \to \mu^- \mu^+] = 2.2 \times 10^{-9}$$